H_2OCEANO 15-23-28

EDILKAMIN
TECNOLOGIA DEL FUOCO

ENGLISH

Dear Sir/Madam
Congratulations and thank you for choosing our product.
Please read this document carefully before you use this product in order to obtain the best performance in complete safety.

For further details or assistance, please contact the DEALER where you purchased the product or visit our website www.edilkamin.com. and click on DEALERS.

Please note that a qualified dealer MUST install the fireplace as is stipulated in the Italian Ministerial Decree No. 37 ex Italian Law No. 46/90.
For installations implemented outside Italy, please refer to the local regulations in the country of use.

NOTE
- After having unpacked the boiler-fireplace, ensure that its contents are complete and intact ("cold hand" handle, guarantee booklet, glove, technical data sheet/CD).

In case of anomalies please contact the dealer where you purchased the product immediately.
You will need to present a copy of the warranty booklet and valid proof of purchase.

- Commissioning/ testing
Commissioning and testing must be performed by the DEALER. Failure to do so will void the warranty.
Commissioning, as specified in standard UNI 10683 Rev. 2005 (section "3.21") consists in a series inspections to be performed with the boiler-fireplace installed in order to ascertain the correct operation of the system and its compliance to applicable regulations.

- Incorrect installation, incorrect maintenance, or improper use of the product, shall relieve the manufacturer from any damage resulting from the use of this product.
- the proof of purchase tag, necessary for identifying the boiler-fireplace, is located:
- on the top of the package
- in the warranty booklet found inside the firebox
- on the nameplate affixed on the right side of the device;

This documentation must be saved for identification together with the valid proof of purchase receipt. The data contained therein must be reported when requesting information and made available should servicing be required;

- All images are for illustration purposes only; actual products may vary.

The undersigned EDILKAMIN S.p.a. with head office headquarters at Via Vincenzo Monti 47 - 20122 Milano - Italy - VAT 0192220192

Declares under its own responsability as follows:
The wood Thermo Fireplaces illustrated below conforms to Regulation EU 305/2011 (CPR) and to the harmonised European Standard EN 13229:2001 - A1:2003 - A2:2004 - AC:2006 - AC:2007

THE WOOD THERMO FIREPLACES, trademark EDILKAMIN, called H_2OCEANO 15-23-28

YEAR OF MANUFACTURE: Ref. Data nameplate Declaration of performance (DoP - EK 078-079-080) Ref. Data nameplate

EDILKAMIN S.p.a. will decline all responsability of malfunctioning or damage to the equipment in case of unauthorized substitution, assembly or modifications of any sort on the said equipment on the part of non-EDILKAMIN personnel.

TECHNICALAND HEATING SPECIFICATIONS

H2OCEANO is designed to heat water by the combustion of wood in the hearth.
The water contained in the thermo fireplace is heated and sent into the heating system (radiators, heated towel rails, underfloor heating panels) and also heats the room in which it is located via natural convection radiation.
The thermo fireplace MUST NEVER FUNCTION WITHOUT WATER IN THE SYSTEM.
The water heats up, circulating in the cavity that runs around the entire semi-circular wall and dome of the hearth.
The hollow space is constructed in thick steel sheet.
The hearth is closed in the front by a door that slides up and down and side to side for cleaning the glass.

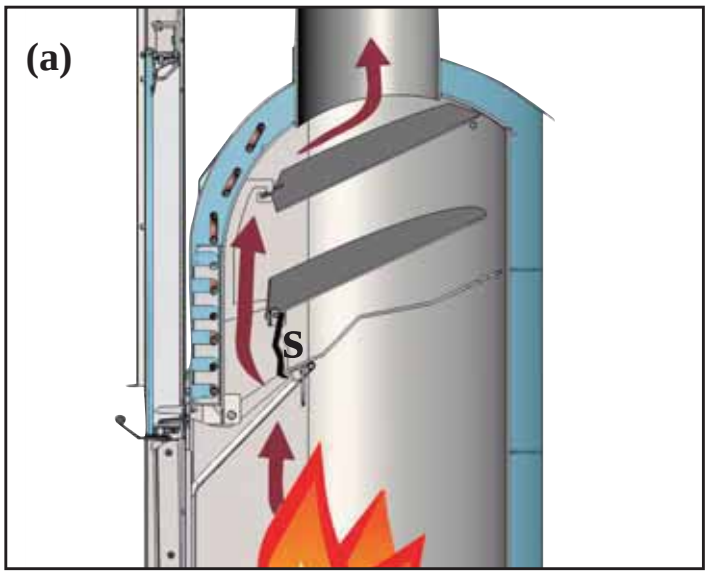

INNOVATIVE PATENTED ASH GRILLE

This allows for the distribution of primary combustion air not only from the bottom up, but also horizontally to achieve high oxygenation of the flame, better combustion and increased power.

"GASKET-SAVING" DOOR

During sliding, the door remains slightly ajar from thermo fireplace inlet in order to protect the gaskets. In the closed position the door is perfectly flanked against the thermo fireplace to ensure maximum sealing and therefore optimal performance. The handle is removable or it can be fixed to the door (see pg. 29)

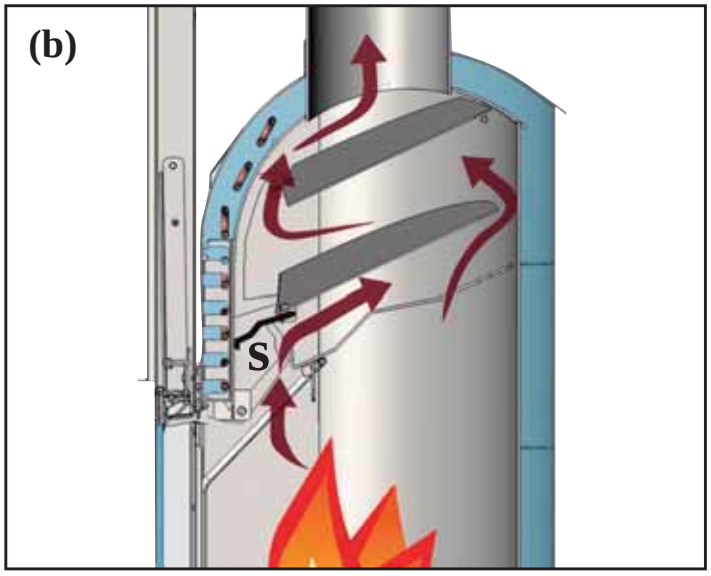

AUTOMATIC SMOKE BY-PASS

When turning on with the frame open, to facilitate combustion start-up, the smoke damper (**S**) remains in the opening position so that smoke can directly and easily reach the chimney flue.
When combustion has been started up, the smoke damper also closes automatically when the door is closed (**S** - fig. b**)**.
In this mode, before reaching the chimney flue, the smoke deviates in such a way to lap and give off heat to the water in an efficient manner.
The by-pass is automatically controlled by the door's movement.

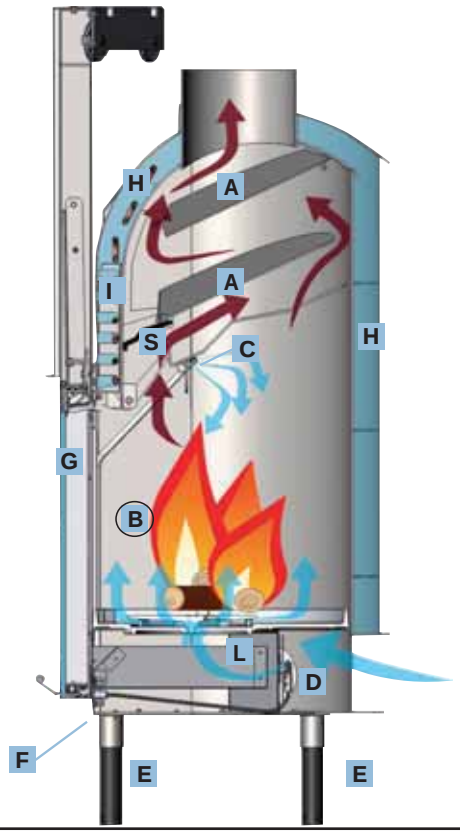

- **A** Deflectors/Ceilings
- **B** Grill motor housing
- **C** Post-Combustion
- **D** Automatic external air inlet adjustment valve (optional)
- **E** Possibility of applying adjustable feet (optional)
- **F** Calibration for automatic adjustment of combustion air
- **G** Up/down sliding door
- **H** Enveloping cavity for water containment
- **I** Safety coil for thermal relief (CS version)
- **L** Primary combustion air distribution ash grille
- **S** Smoke diversion damper

SAFETY INFORMATION

IMPORTANT: ONLY THERMO FIREPLACES WITH COILS DRIVEN BY A THERMAL RELIEF VALVE SHOULD BE INSTALLED ON CLOSED TANK SYSTEMS (version marked with the abbreviation CS).

• The installer is responsible for the correct installation of the system, which is to be compliant with UNI standards 10683 – 9615/90 – 10412:2

• All must be performed by qualified personnel according to Ministerial Decree 37 ex Law 46/90

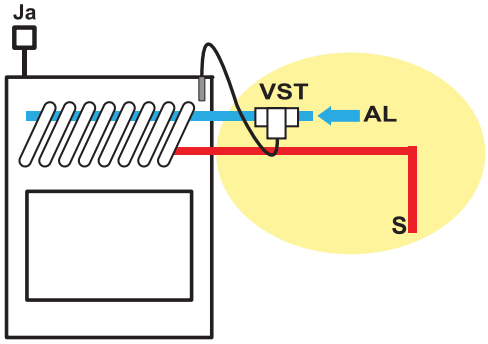

The thermal relief valve (TRV - provided by Edilkamin) must be connected to the cooling circuit (AL) with a minimum pressure of 1.5 bar.
JA = automatic relief valve
S = drain

Litres ?

• The heating system must include an expansion tank dedicated only to the thermo fireplace, evaluated based on the volume of water present in the system itself (an expansion tank shared with other generators is not allowed).

1 Year

• The safety and thermal relief valves must be checked at least once a year by qualified personnel according to Ministerial Decree 37 ex Law 46/90.

H_2OCEANO MUST NEVER BE MADE TO OPERATE WITHOUT WATER IN THE SYSTEM.
MUST BE MADE WITH A PRESSURE OF ABOUT 1.5 BAR.

IT CAN BE DAMAGED IF IT IS IGNITED WITH NO WATER IN THE SYSTEM.

• The thermo fireplace is designed to heat water by means of wood combustion in the hearth.

• The only hazards that can derive from using the thermo fireplace pertain to non-compliance with the installation instructions, direct contact with live electrical parts (inside), contact made with the fire and hot parts or foreign substances being put in the fireplace.

• For the thermo fireplace to function properly installation must be carried out according to the instructions given in this booklet and the door must only be opened to refill the hearth with wood.

• Never put foreign substances in the hearth.

• Whilst functioning, the door must never be opened. In fact, combustion is fully automatic and requires no manual intervention.

• Do not use flammable products to clean the smoke channel (the flue section connecting the boiler-fireplace smoke outlet to the chimney flue).

• The glass can be cleaned when COLD with a suitable product (e.g. GlassKamin) and a cloth. Do not clean when hot.

• The exhaust pipes and the door become very hot when the thermo fireplace is used.

• Do not place anything that is not heat resistant close to the thermo fireplace.

• NEVER use liquid fuel to ignite the thermo fireplace or to rekindle the embers.

• Do not obstruct the external air inlets in the room where the fireplace is installed or the air inlets of the thermo fireplace itself.

• Do not wet the thermo fireplace and do not go near the electrical parts of the system with wet hands.

• Do not use reducers on the smoke exhaust pipes.

• The thermo fireplace must be installed in a place that is suitable against fire hazards and equipped with all that is required (power and air inlets/outlets) for it to function properly and safely.

GENERAL SAFETY REGULATIONS

IN CASE OF INSTALLATION ON OPEN TANK SYSTEMS

The connections, commissioning and verification of proper operation of the thermo fireplace must be carried out by qualified personnel, who can implement all connections in accordance with the laws in force, particularly with Italian D.M 37 Law No. 46/90, apart from complying with these instructions.

For installations implemented outside Italy, please refer to the local regulations in the country of use.

The thermo fireplace and the system are filled with water that flows from the water inlet pipe (the diameter must not be less than 18 mm) to the open expansion tank.

All the vents of the radiators must be opened during this phase so as to prevent air pockets from forming in the system, which would obstruct the circulation of water.

NB:
• The open tank should be positioned at a height greater than 3 m higher than the highest component of the primary circuit and less than 15 m from the edge of the thermo fireplace.

• In any case, the tank must be high enough to create a greater pressure than that produced by the pump (circulator).
• The system must never be filled directly from the water mains as the pressure may be greater than that stipulated on the data plate of the thermo fireplace, with resulting damage to the thermo fireplace itself.
• The safety pipe to the expansion tank must allow the water to flow freely without shut-off valves and be appropriately insulated to prevent the water inside from freezing, which would compromise the connection.
• The water inlet pipe must not have taps nor curves.
• The maximum operating pressure must not exceed 1.5 bar
• The testing pressure is 3 bar.
• It is a good idea to add an anti-freeze liquid to the water contained in the system or to observe standard UNI 8065.
• Never ignite the fire in the thermo fireplace (not even as a test) unless the system is filled with water as this could cause irreparable damage.
• Connect the drains of the thermal relief valve (TRV) and the safety valve (SV) (diagrams are found on the following pages).
• The flow test of the system must be carried out with the expansion tank open.
• It is recommended to install a 6 bar safety valve on the hot sanitary water circuit so as to drain any excessive increase in the volume of the water in the heat exchanger.
• Place all the components of the system (circulator, heat exchanger, valves, etc.) in easily accessible points for routine and special maintenance procedures.

IN CASE OF INSTALLATION ON CLOSED TANK SYSTEMS

(provisions in addition to those provided for open tank systems)

• Be careful not to exceed 1.5 bar when filling the system.

• Only if a thermal relief valve actuates the coil can the fireplace be installed on a CLOSED TANK system (version marked with the abbreviation CS).

• When connecting a thermo fireplace to an existing system, an assessment must be made regarding a need for another CLOSED TANK on the system.

- The upstream pressure of the cooling circuit must be at least 1.5 bar (UNI 10412/2 point 6.2).

WATER TREATMENT
If need be, antifreeze, descaling and anticorrosive solutions are to be added to the water.
A softener must be used if the hardness of the water used to refill and top-up the system exceeds 35°f (French degrees).

Please refer to UNI 8065-1989 standard (water treatment in domestic heating systems).

DIMENSIONS

FRONT

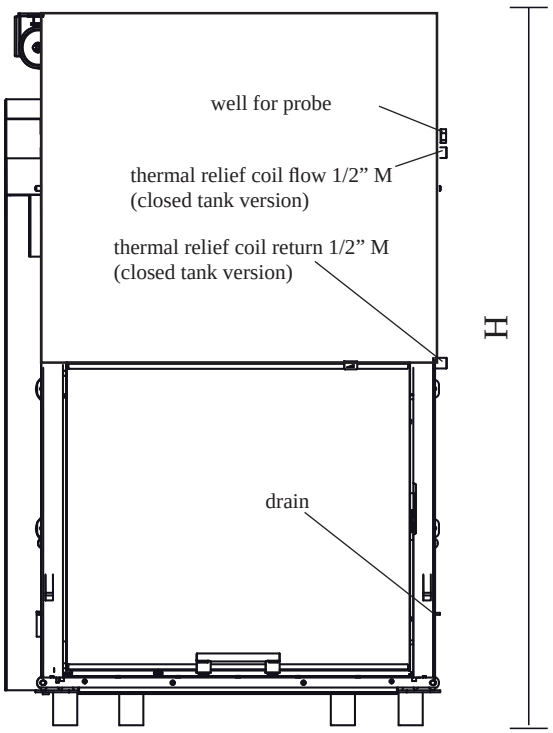

SIDE

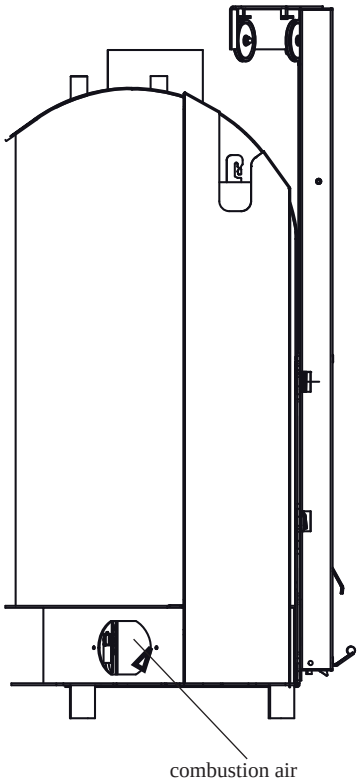

SYSTEM

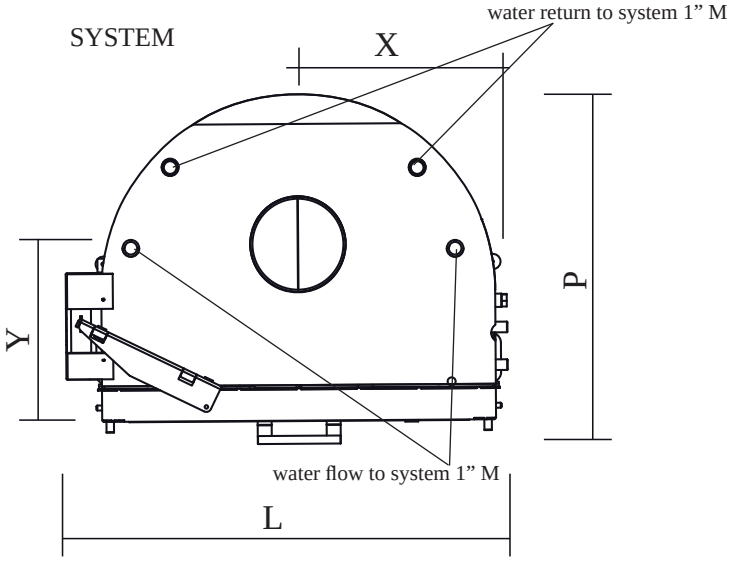

	H2OCEANO 15 - 15/CS	H2OCEANO 23 - 23/CS	H2OCEANO 28 - 28/CS	
L	74	88	106	cm
P	62	68	83	cm
H	135 without feet (with feet + 14 cm)	147 without feet (with feet + 14 cm)	147 without feet (with feet + 14 cm)	cm
X	34	34	51	cm
Y	36	37	50	cm
internal hearth dimensions	50x38	60x50	78x60	cm

THE INLET AND OUTLET PIPES MUST BE CROSSED FOR THIS TO FUNCTION PROPERLY

TECHNICALAND HEATING SPECIFICATIONS

	15-15/CS	23-23/CS	28-28/CS	
Thermal output (burnt)	18,5	27,8	34,8	kW
Rated power	14,8	22,2	27,8	kW
Water heating power	12,1	18,2	22,8	kW
Approx. overall efficiency	80	80	80	%
Approx. water efficiency	82	82	82	%
Class efficiency (EN 303-5)	> 3	> 3	> 3	-
ø female smoke outlet	18	22	25	cm
Maximum operating pressure	1,5	1,5	1,5	bar
Fuel consumption	4,5	7	8,5	kg/h
Water capacity	50	100	130	litres
Heating capacity *	355	535	670	m³
Weight including packing	240	285	325	kg
Hot sanitary water production (kit 1- 3 - N3 - N3bis)**	13-14	13-14	13-14	litres/min
ø external air inlet	12,5	12,5	12,5	cm
System return (male)	1”	1”	1”	inches
System flow (male)	1”	1”	1”	inches

N.B.: DATA PROJECT (Refer to standard EN 13229)
***** The heatable room dimensions are calculated on the basis home insulation in compliance with Italian law 10/91, and subsequent changes together with an expected heat output of 33 Kcal/m³ per hour.
* It is also important to consider the position of the boiler-fireplace in the room to be heated.
* * boiler temperature is 70° - (ðT=25K)

THE DIAMETER OF THE CHIMNEY FLUE TO BE USED MUST BE ASSESSED BY THE INSTALLER ACCORDING TO THE HEIGHT OF THE CHIMNEY FLUE ITSELF.

THE INLET AND OUTLET PIPES MUST BE CROSSED FOR THIS TO FUNCTION PROPERLY

The data shown above is purely indicative.
EDILKAMIN s.p.a. reserves the right to change the products at its discretion without notice.

INSTALLATION

IMPORTANT ADVICE REGARDING THE INSTALLATION

Other than that described in this documentation, you are also asked to note the following UNI standards:
- **No. 10683** - firewood heat generators: installation requirements
- **No. 9615/90** - calculating the internal dimensions of fireplaces
- **No. 10412:2** - hot water heating systems. Specific safety requirements for systems provi ded with residential solid fuel burning applian ces and combined boiler, not exceeding a total nominal heat input of 35 kW.

Particularly:
- **Before carrying out any assembly it is** important to verify compatibility of the appliance, as stipulated in UNI 10683 standard, paragraphs 4.1 / 4.1.1 / 4.1.2.
- When assembly is completed, the installer must implement "start-up operations" and issue documentation as required by UNI 10683 standard in paragraphs 4.6 and 5, respectively.
- **The connections, commissioning and verification of proper operation of the thermo fireplace** must be carried out by qualified personnel, who can implement the electrical and plumbing connections as required by UNI standards 10683, paragraph 4.5 and 10412:2, apart from complying with these assembly instructions.
- Verification must be carried out with the fireplace on and after having been on for a couple of hours, before covering the thermo fireplace, so that you can intervene if need be.

After which, the finishing operations such as:
- setting-up the fireplace mantel
- mounting the fireplace covering
- pilasters, painting, etc.

are carried out, once the tests are completed successfully. Consequently, EDILKAMIN does not accept responsibility for expenses deriving from demolition as well as construction even if either occurs as a result, after having replaced any damaged parts of the thermo fireplace.

EXTERNAL AIR INLET

An external connection with a 12,5 cm diameter crosssection throughout (refer to the technical table) is absolutely necessary for the thermo fireplace to function properly and is therefore imperative for this to be implemented.
This connection must link the air adjustment mechanism (E), delivered separately. The mechanism, delivered separately, can be assembled either right or left of the thermo fireplace. Connection can be made with a flexible aluminium pipe. Ensure that the points where there may be dispersion of air are sealed well. The air adjustment mechanism (E) can be removed and mounted on the right side of the thermo fireplace. It is recommended to place a protection grille on the outer part of the air inlet channel, however, ensure that this does not reduce the cross-section. For distances longer than 3 m or with bends, increase the given cross-section by a minimum of 10% to a maximum of 20%. The intake of external air must enter at floor level (it cannot enter from above).

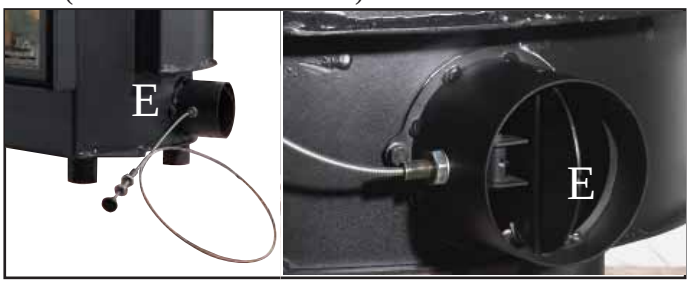

CHIMNEY FLUES AND CHIMNEYPOT

The thermo fireplace smoke outlet has a circular crosssection so that stainless steel pipes can be used. If the chimney flue inlet is not vertically above the thermo fireplace, the connection from the fireplace to the flue must not have a narrowing section or inclinations greater than 45° (fig. 1-2-3-4).
If the chimney flue is not brand new or too big, it is recommended to fit in stainless tubes of an appropriate diameter and with suitable insulation.
If the chimney flue is installed outside, it is recommended to use an insulated, double walled, stainless steel flue.
The characteristics of the construction must be suitable to withstand a smoke temperature of at least 450° C, with particular reference to the mechanical resistance, insulation and the gas tight sealing.
The junction of the steel flue inlet and the smoke outlet of the fireplace must be sealed with high temperature mastic.
The fundamental characteristics of the chimneypot are:
- an internal cross-section at the base, which is the same as that of the chimney flue.
- an outlet cross-section which is no smaller than twice that of the chimney flue.
- its position must be high enough to catch the wind and avoid downdraft areas in turbulent wind.

In addition to that mentioned above, please consider the indications stipulated in UNI 10683/2005 standard, paragraph 4.2: "connection to the smoke outlet system" and its subsections.

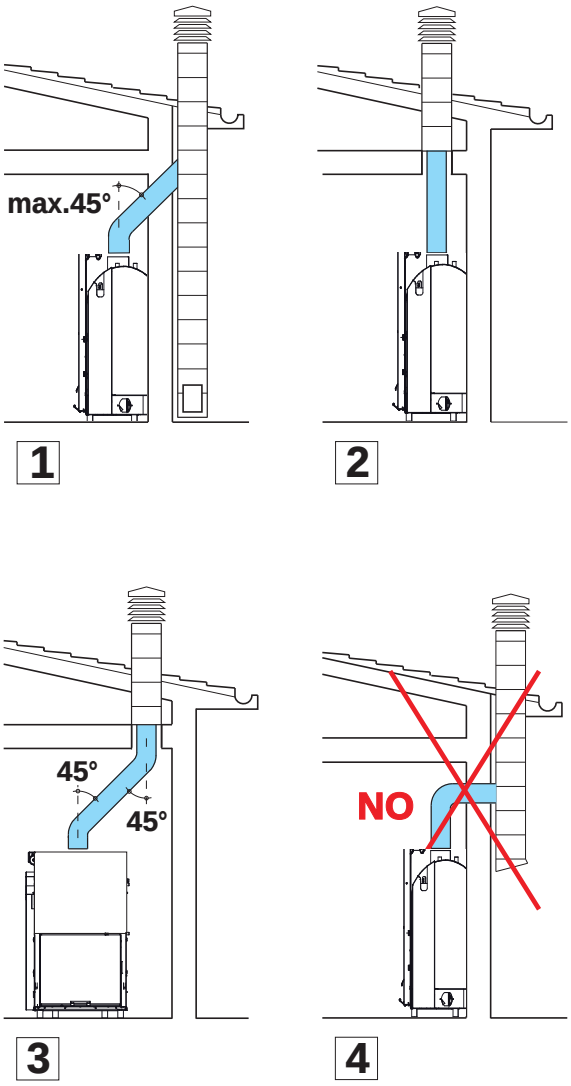

INSTALLATION

If combining with a pre-fabricated Edilkamin covering, to define the exact positioning of the thermo fireplace, it is important to take the chosen covering model into consideration.
The positioning is implemented according to the model chosen (refer to the installation instructions found inside the packaging of each thermo fireplace covering).
Always ensure the thermo fireplace is level during the installation process.
- Drill a hole into the wall or the flooring for the external air intake and connect the air adjustment mechanism to the hole as described in the chapter called “external air inlet”.
- Use a stainless steel flue to connect the thermo fireplace to the chimney flue, adhering with the diameters indicated in the specifications table and the guidelines given in the chapter called “chimney flues”.
- Verify that all moving parts function properly before setting the thermo fireplace covering in place.
- This system must be tested and ignited for the first time before the covering is set in place.

INSTALLATION COVERING, FIREPLACE MANTEL AND VENTILATION OUTLETS
The base of the thermo fireplace covering must allow the internal air to be recycled. Therefore, suitable slots or apertures must be made for the air to pass through. Parts of the thermo fireplace covering that are made of marble, stone and bricks must be mounted with a small gap between them and the fireplace so as to prevent possible breakage due to expansion and excessive overheating.
Wooden parts must be protected by fire resistant panels and no part must touch the thermo fireplace, on the contrary, there must be an appropriate distance of at least 1 cm to allow the air to flow, preventing heat accumulation. The fireplace mantel can be made of fireproof plasterboard panels or gypsum board and, however, of completely fireproof material. Air should be allowed to flow inside the fireplace mantel (through the gap between the door and the beam). Through convective motion, the air will flow out from the grille installed at the top, resulting in heat recovery and preventing excessive overheating.
The fireplace mantel must have appropriate openings to carry out maintenance on the fittings.
In addition to that mentioned above, please consider the indications stipulated in the UNI 10683 standard, paragraphs 4.4 and 4.7: “insulation, finishing, fireplace covering and safety recommendations”.

Insulating mats must be applied when using an installation KIT so as to protect it from the heat radiation emitted by the thermo fireplace.

INLET FRAME (OPTIONAL)
To facilitate coupling with the covering’s components, the thermo fireplace can be fitted with a frame (A) to be applied on the front of the inlet.

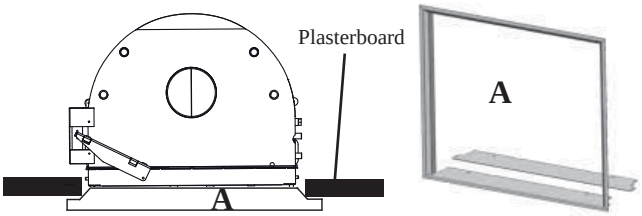

INSTRUCTIONS FOR USE

Practical advice
It is recommended to keep the radiators closed in the room where the thermo fireplace is installed; The heat emitted from the outlet may be sufficient to heat.
- An incomplete combustion process causes excessive fouling on the heat exchanger pipe.
To prevent this you must:
- burn dry wood.
- ensure the hearth contains a bed of embers and burning carbon before adding more wood.
- place larger logs together with smaller ones.
- make sure the temperature of the return water is at least 50 °C (use temperature control valve).

Igniting the fireplace
- Ensure that at least one radiator is always open.
- Actuate the switches of the electronic regulator.
- Place a pile of medium-thin dry wood in the thermo fireplace and ignite the fire.
- Wait a few minutes until it reaches sufficient combustion.
- Close the door
- Set the thermostat on the electronic regulator (*) at a temperature between 50 and 70° C.
NOTE: There may be a slight smell of paint the first few times it is ignited, however, this will disappear quickly.

3-way valve
- During ignition the 3-way valve (*) diverts the flow of water, forcing it to return directly to the thermo fireplace;
when the set temperature is reached, the 3- way valve (*) diverts the flow to the system (does not depend on the kit installed).

By-pass damper
- When the door is closed, the by-pass damper automatically diverts smoke, thus improving efficiency.
- When the door is opened, the damper bypass opens automatically, allowing the smoke to reach the smoke flue directly, preventing it from coming out of the inlet.

Thermal Relief Valve
If the water temperature exceeds 90° C (e.g. because of too much wood being placed in the hearth) the thermal relief valve will be activated and the acoustic signal triggered.
In this case you must proceed as follows:
Do not load additional fuel and wait for the temperature to fall below 80°C checking the warning lights on the electronic regulator. The hot water tap can be opened to speed up the cooling process if the thermo fireplace is equipped with a hot sanitary water production KIT.

(*) these components of the system are to be provided by the installer.

INSTRUCTIONS FOR USE

fig. 1

External air regulation
The control, via the dedicated damper (E- fig. 1) located on the external air intake, regulates the quantity of primary air necessary for combustion.
Push the knob to close the external air intake; pull the knob to open the external air intake.

OPTIONAL THERMOSTATIC VALVE (FIG. 2)
Manual adjustment of combustion air (to be carried out during installation)
To obtain the desired water temperature, manually calibrate the thermostatic valve.
Using the Allen supplied (X - fig. 3) it is possible to regulate the thermostatic valve using the screw located just below the ash pan (Y - fig. 3).
• Screw on RT: combustion air on minimum
• Screw all the way to the LT: combustion air on maximum
• obviously, all intermediate settings are possible
NOTE: If a thermostatic valve must be installed, you must remove the manual air intake damper by removing the valve and the cable with the knob (E- fig. 1).

Automatic adjustment of combustion air
The combustion air is captured by the external air intake via the outlet (E - fig. 1) and reaches the hearth through the ash grille. This is adjusted using valve V (fig. 2).
If the temperature inside the hearth is low,compared to that set during calibration, the valve automatically positions itself in the open position and vice versa, it closes when the temperature is high.
This allows the right quantity of wood to be consumed for the set thermal comfort to be reached and unnecessary waste is avoided.
NOTE: when the thermostatic valve fully closes the combustion air inlet completely (the temperature in the hearth is very high), limited but sufficient access is allowed for the air to enter and keep the glass clean.

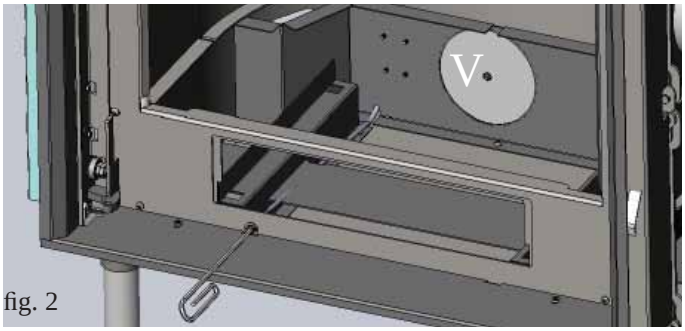

fig. 2

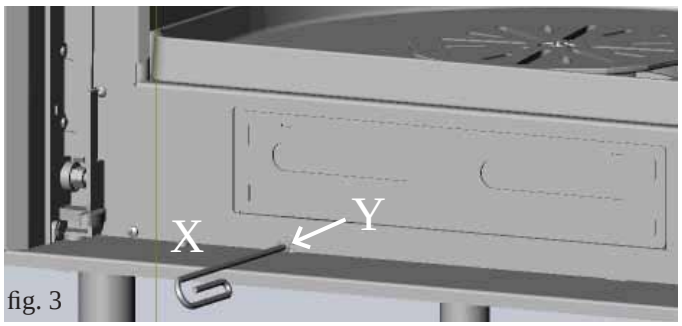

fig. 3

Installation of thermostatic valve "V" is optional.
All operations must be performed with the thermo fireplace off and fully cooled.
The mains power must also be disconnected.
Proceed as follows:
- Open the door and block it in the open position in order to easily work inside the hearth (fig. 4).
- Remove the following components (fig. 5):
• ash pan
• cast iron grille
• hearth base
Note: The hearth base is only on rested on the gasket, therefore to remove it simply lift it up (keep in mind that if the thermo fireplace has been used for a long period of time there may be significant adhesion between hearth base and hearth).
- Install the pre-assembled thermostatic valve on the fixing pate (fig. 6 - pg. 29).
- Secure the plate with the three screws supplied (S) to the bottom of the hearth (fig. 7 - pg. 29).
Before fixing, make sure to pass the adjustment cable and the probe wire through the prepared slots.
- The adjustment cable must be inserted into the front hole under the ash pan (fig. 8 - pg. 29), and secured in position using the elastic ring supplied.
- The probe wire must be unwound along the right side of the ash pan proceeding then to the outside of the thermo fireplace (fig. 9 - pg. 29) via the hole on the right side.
- At this point insert the probe in the well on the thermo fireplace (pg. 24).
- Before putting back the hearth base check the wear condition of the gasket (if necessary replace it) and insert the gasket on the perimeter of the fixing plate of the thermostatic valve (fig. 8 - pg. 29).


fig. 4

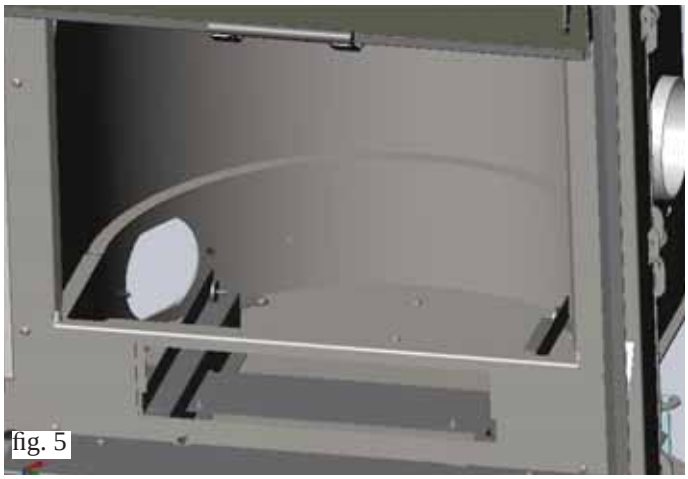
fig. 5

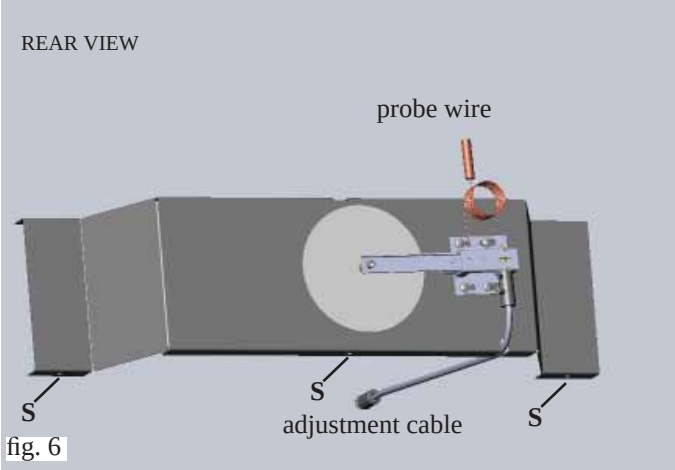

fig. 6

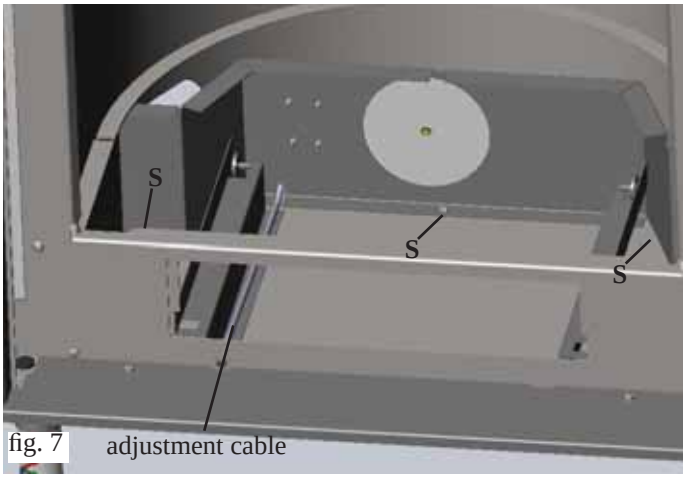

fig. 7

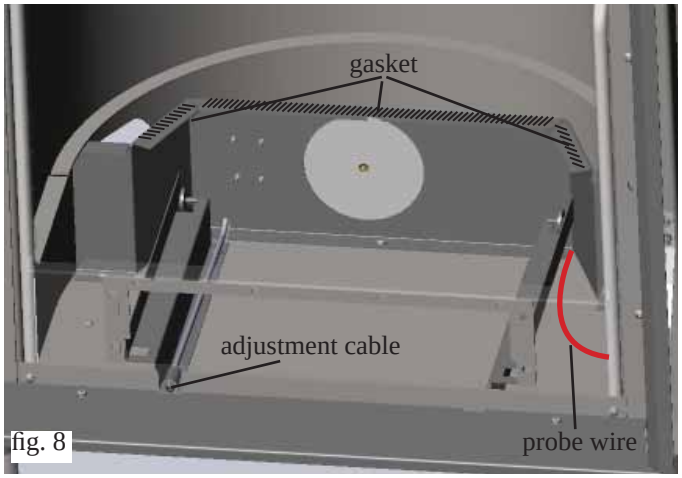

fig. 8

fig. 9

Probe positioning for OPEN TANK version


fig. 10


fig. 11

Probe positioning for CLOSED TANK version
First insert the probe for the temperature relief valve, then the probe for the thermostatic valve.


fig. 12


fig. 13


fig. 14

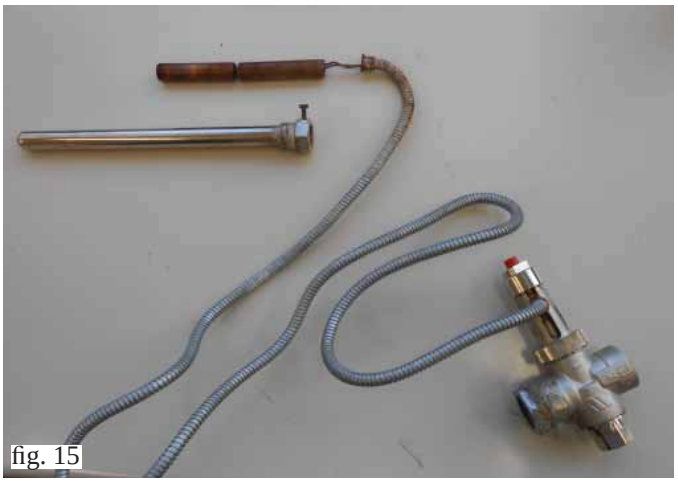
fig. 15

Door opening
- Use the provided removable handle to open the door (fig. 16).
- The same handle can be fixed to the door using the 2 grub screws supplied.

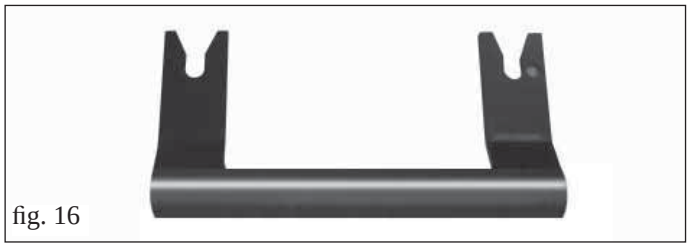
fig. 16

Installing counterbalances
The latch door is equipped with counterbalances which ensure smooth movements as well as closure of the door.
The counterbalances can be regulated by adding platte/s (additional counterbalances) that are supplied with the thermo fireplace (P - fig. 17).

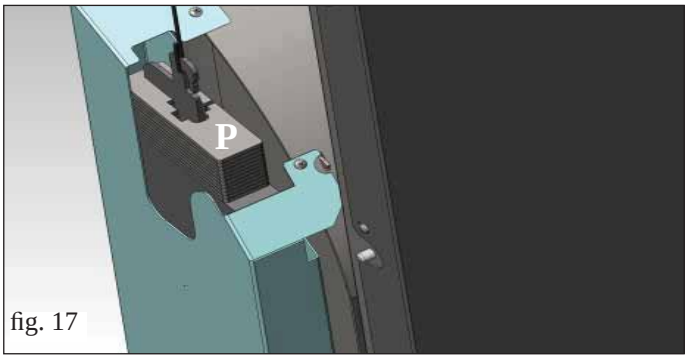

fig. 17

MAINTENANCE
Cleaning the hearth
- The soot deposits that tend to accumulate on the internal walls of the hearth decrease the efficiency of heat transfer.
- It is therefore necessary to clean the fireplace regularly, by bringing the water temperature to 80 / 85° C to soften the fouling and then remove this with a steel spatula.

Glass cleaning
- Use an appropriate spray for ceramic glass to clean the glass (Glasskamin - Edilakmin)..
- The glass must be cleaned when cold.
- For the opening swing of the door it is necessary to bring it in the closed position.
- Insert the “cold handle” door handle on the latch between the structure and the door and turn to open (fig. 18).

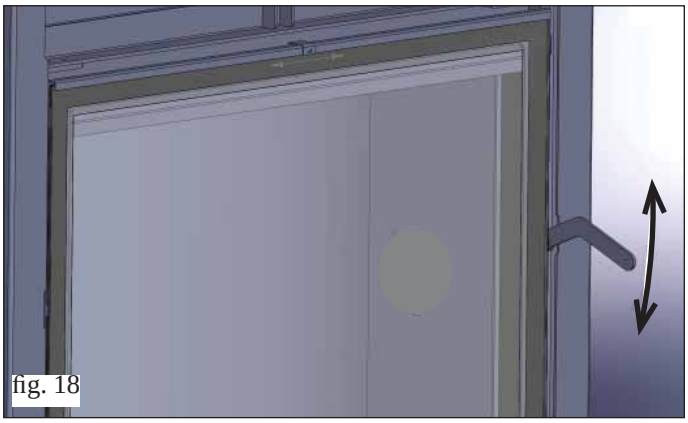
fig. 18

SYSTEM FOR AN OPEN TANK INSTALLATION

AN EXAMPLE OF A HYDRAULIC SYSTEM FOR A THERMO FIREPLACE WITH HOT SANITARY WATER PRODUCTION USING KIT 1

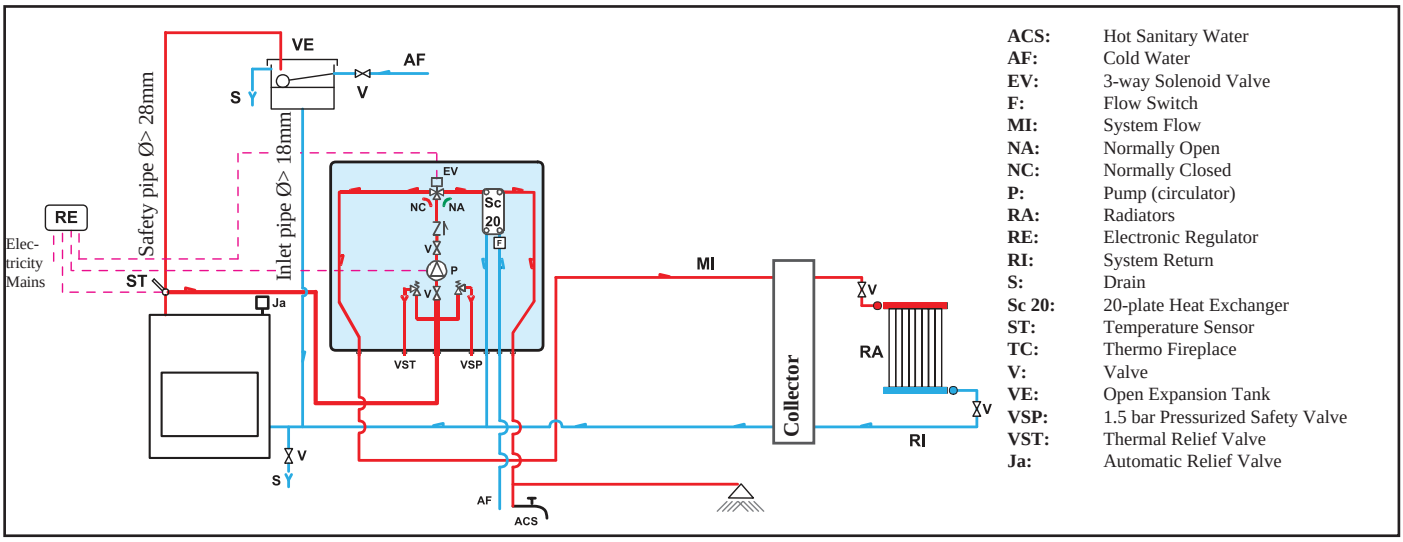

ACS:	Hot Sanitary Water
AF:	Cold Water
EV:	3-way Solenoid Valve
F:	Flow Switch
MI:	System Flow
NA:	Normally Open
NC:	Normally Closed
P:	Pump (circulator)
RA:	Radiators
RE:	Electronic Regulator
RI:	System Return
S:	Drain
Sc 20:	20-plate Heat Exchanger
ST:	Temperature Sensor
TC:	Thermo Fireplace
V:	Valve
VE:	Open Expansion Tank
VSP:	1.5 bar Pressurized Safety Valve
VST:	Thermal Relief Valve
Ja:	Automatic Relief Valve

Kit 1 is designed to facilitate the work carried out by the installers. In fact, it consists of all the necessary components for the product to be properly installed.

NB: insulating mats must be applied so that the components of the kit are well-protected from the heat radiation emitted by the thermo-fireplace.

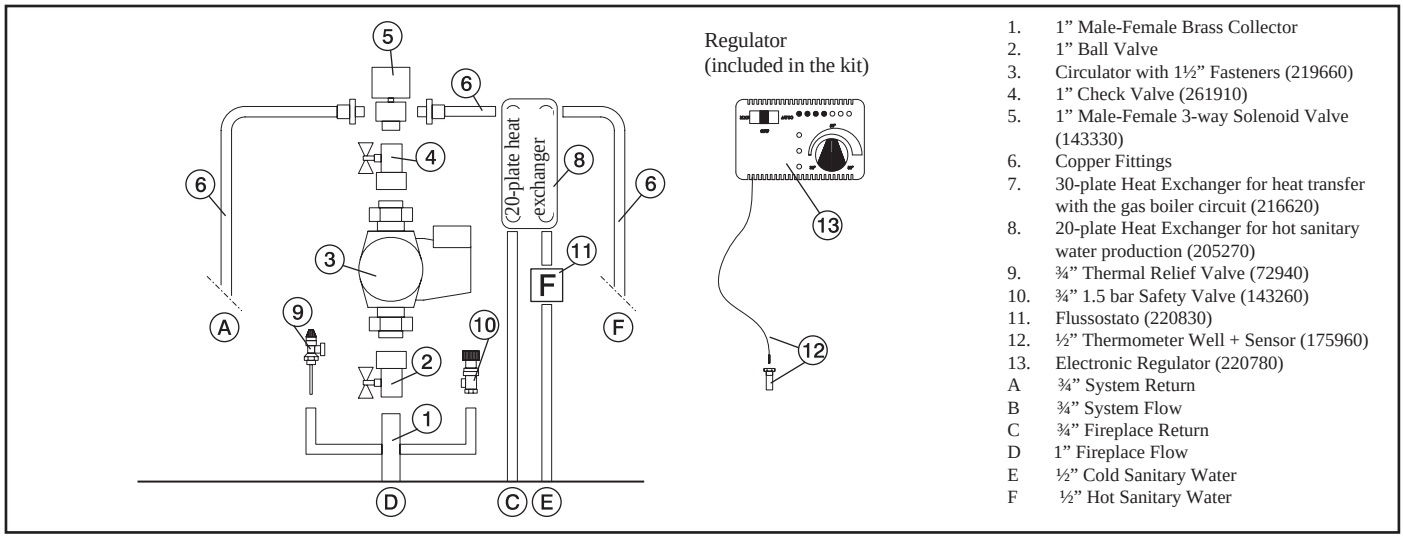

1. 1” Male-Female Brass Collector
2. 1” Ball Valve
3. Circulator with 1½” Fasteners (219660)
4. 1” Check Valve (261910)
5. 1” Male-Female 3-way Solenoid Valve (143330)
6. Copper Fittings
7. 30-plate Heat Exchanger for heat transfer with the gas boiler circuit (216620)
8. 20-plate Heat Exchanger for hot sanitary water production (205270)
9. ¾” Thermal Relief Valve (72940)
10. ¾” 1.5 bar Safety Valve (143260)
11. Flussostato (220830)
12. ½” Thermometer Well + Sensor (175960)
13. Electronic Regulator (220780)

A ¾” System Return
B ¾” System Flow
C ¾” Fireplace Return
D 1” Fireplace Flow
E ½” Cold Sanitary Water
F ½” Hot Sanitary Water

Electrical Connections

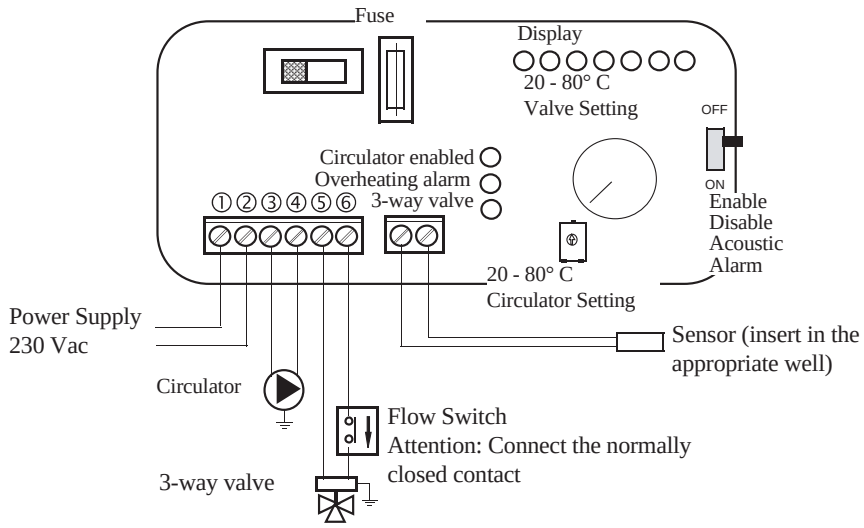

SELECTOR FUNCTIONS

Selector: OFF	Everything is switched off
Selector: MAN	Driven Circulator Valve is set
Selector: AUTO	Circulator is set Valve is set
Alarm selection	No acoustic signal in the OFF position

KIT 1 code 261880

THE INLET AND OUTLET PIPES MUST BE CROSSED FOR THIS TO FUNCTION PROPERLY

SYSTEM FOR AN OPEN TANK INSTALLATION

ENGLISH

AN EXAMPLE OF A HYDRAULIC SYSTEM FOR A THERMO FIREPLACE THAT DOES NOT PRODUCE HOT SANITARY WATER BUT HAS A WALL MOUNTED BOILER USING KIT 2

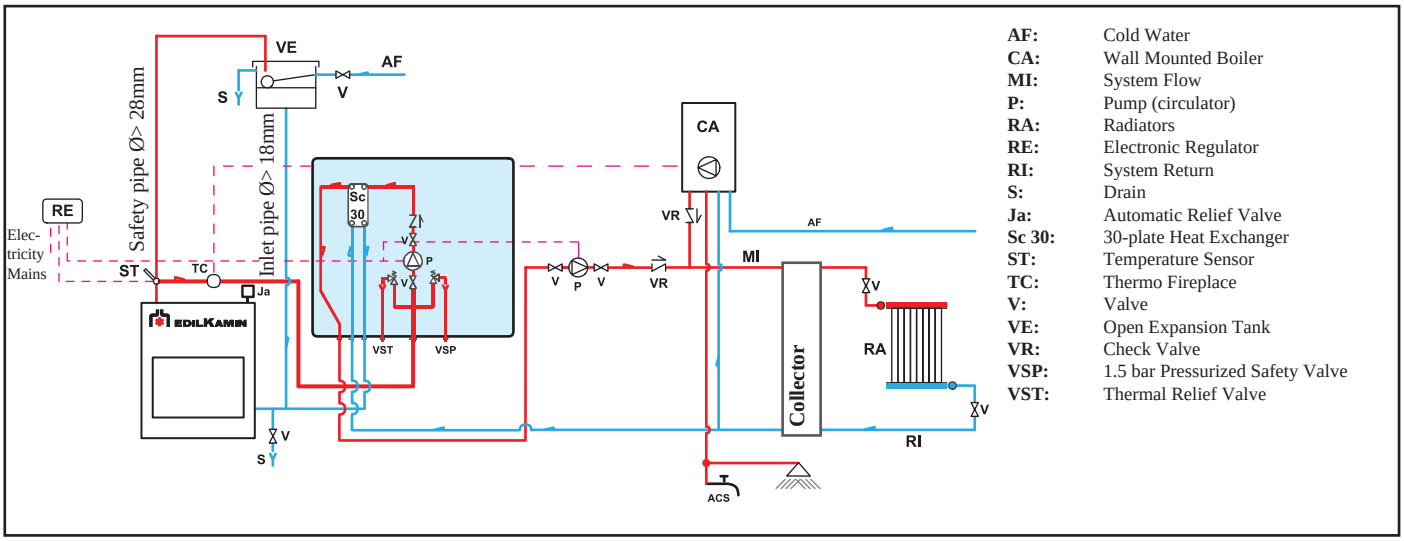

AF:	Cold Water
CA:	Wall Mounted Boiler
MI:	System Flow
P:	Pump (circulator)
RA:	Radiators
RE:	Electronic Regulator
RI:	System Return
S:	Drain
Ja:	Automatic Relief Valve
Sc 30:	30-plate Heat Exchanger
ST:	Temperature Sensor
TC:	Thermo Fireplace
V:	Valve
VE:	Open Expansion Tank
VR:	Check Valve
VSP:	1.5 bar Pressurized Safety Valve
VST:	Thermal Relief Valve

Kit 2 is designed to facilitate the work carried out by the installers. In fact, it consists of all the necessary components for the product to be properly installed.

NB: insulating mats must be applied so that the components of the kit are well-protected from the heat radiation emitted by the thermo-fireplace.

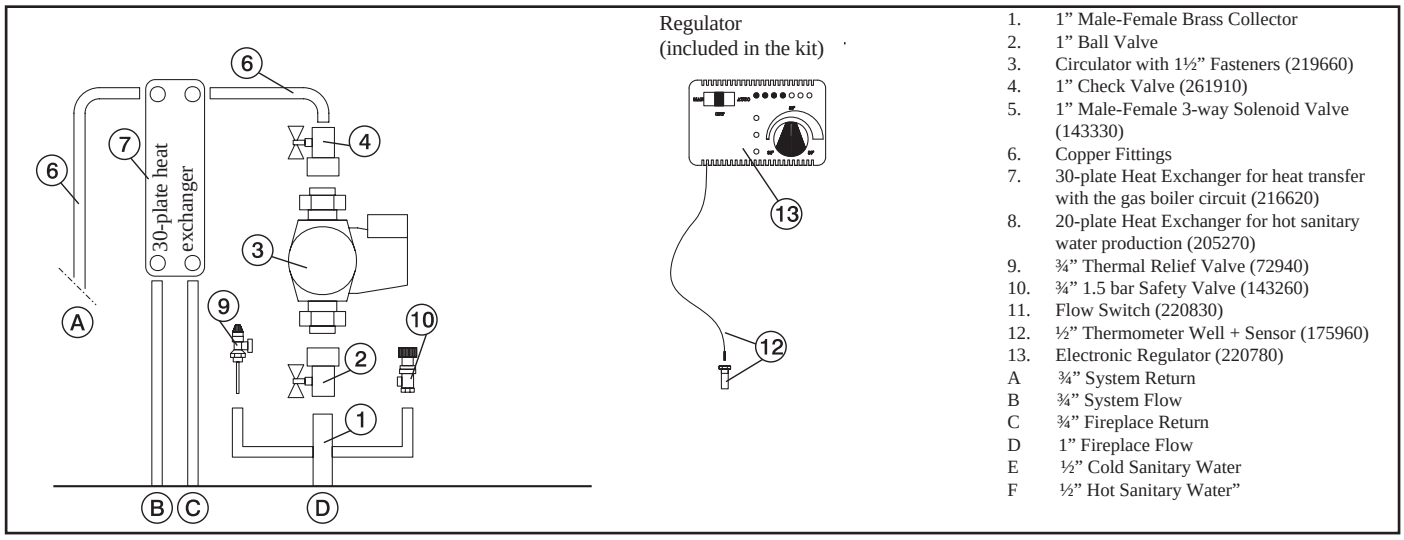

1. 1” Male-Female Brass Collector
2. 1” Ball Valve
3. Circulator with 1½” Fasteners (219660)
4. 1” Check Valve (261910)
5. 1” Male-Female 3-way Solenoid Valve (143330)
6. Copper Fittings
7. 30-plate Heat Exchanger for heat transfer with the gas boiler circuit (216620)
8. 20-plate Heat Exchanger for hot sanitary water production (205270)
9. ¾” Thermal Relief Valve (72940)
10. ¾” 1.5 bar Safety Valve (143260)
11. Flow Switch (220830)
12. ½” Thermometer Well + Sensor (175960)
13. Electronic Regulator (220780)

A ¾” System Return
B ¾” System Flow
C ¾” Fireplace Return
D 1” Fireplace Flow
E ½” Cold Sanitary Water
F ½” Hot Sanitary Water”

Electrical Connections

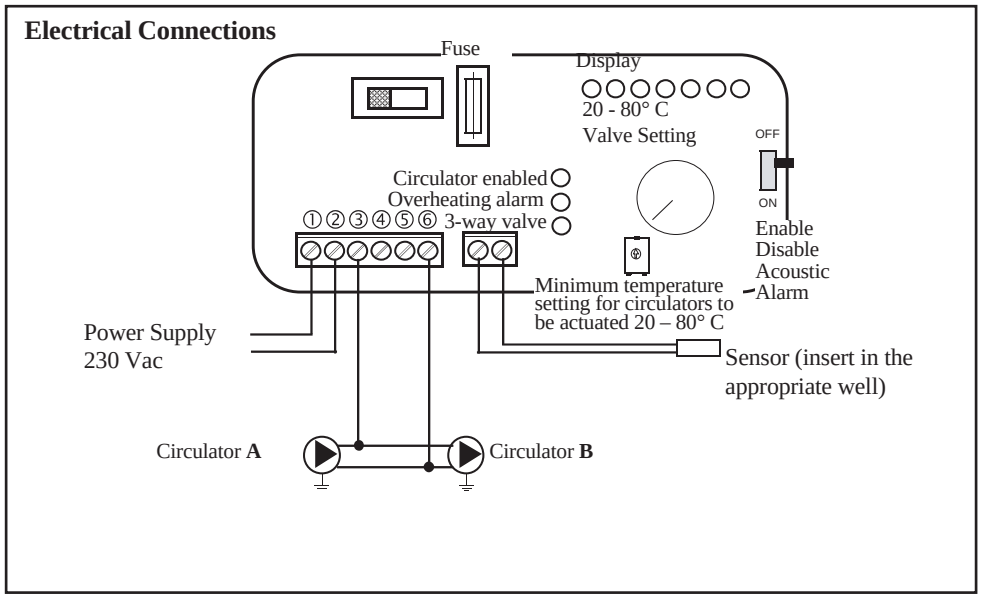

SELECTOR FUNCTIONS

Selector: OFF	Everything is switched off
Selector: MAN	Driven Circulator Valve is set
Selector: AUTO	Circulator is set Valve is set
Alarm selection	No acoustic signal in the OFF position

KIT 2 code 261890

THE INLET AND OUTLET PIPES MUST BE CROSSED FOR THIS TO FUNCTION PROPERLY

SYSTEM FOR AN OPEN TANK INSTALLATION

AN EXAMPLE OF A HYDRAULIC SYSTEM FOR A THERMO FIREPLACEITH HOT SANITARY WATER PRODUCTION AND A WALL MOUNTED BOILER USING KIT 3

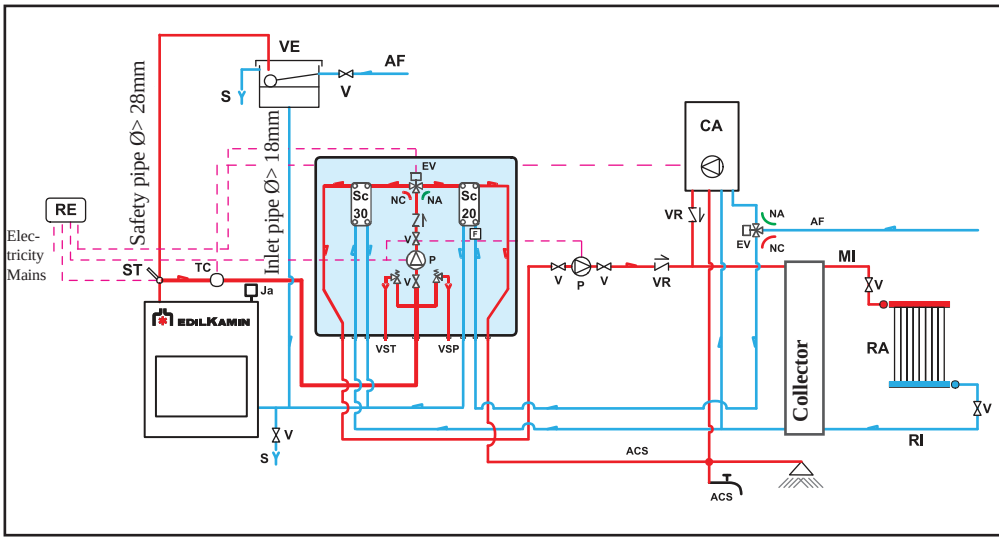

ACS:	Hot Sanitary Water
AF:	Cold Water
CA:	Wall Mounted Boiler
EV:	3-way Solenoid Valve
F:	Flow Switch
MI:	System Flow
NA:	Normally Open
NC:	Normally Closed
P:	Pump (circulator)
RA:	Radiators
RE:	Electronic Regulator
RI:	System Return
S:	Drain
Sc 20:	20-plate Heat Exchanger
Sc 30:	30-plate Heat Exchanger
TC:	Thermo Fireplace
V:	Valve
VE:	Open Expansion Tank
VR:	Check Valve
VSP:	1.5 bar Pressurized Safety Valve
VST:	Thermal Relief Valve
Ja:	Automatic Relief Valve

Kit 3 is designed to facilitate the work carried out by the installers. In fact, it consists of all the necessary components for the product to be properly installed.

NB: insulating mats must be applied so that the components of the kit are well-protected from the heat radiation emitted by the thermo-fireplace.

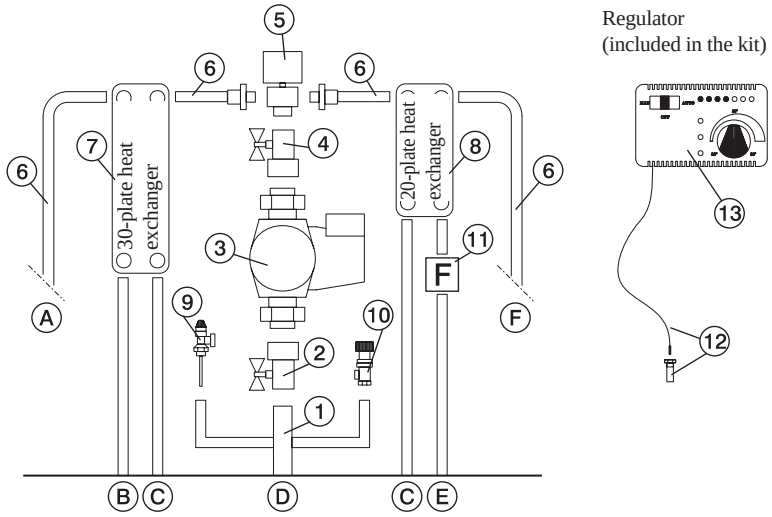

1. 1” Male-Female Brass Collector
2. 1” Ball Valve
3. Circulator with 1½” Fasteners (219660)
4. 1” Check Valve (261910)
5. 1” Male-Female 3-way Solenoid Valve (143330)
6. Copper Fittings
7. 30-plate Heat Exchanger for heat transfer with the gas boiler circuit (216620)
8. 20-plate Heat Exchanger for hot sanitary water production (205270)
9. ¾” Thermal Relief Valve (72940)
10. ¾” 1.5 bar Safety Valve (143260)
11. Flow Switch (220830)
12. ½” Thermometer Well + Sensor (175960)
13. Electronic Regulator (220780)

A ¾” System Return
B ¾” System Flow
C ¾” Fireplace Return
D 1” Fireplace Flow
E ½” Cold Sanitary Water
F ½” Hot Sanitary Water

Electrical Connections

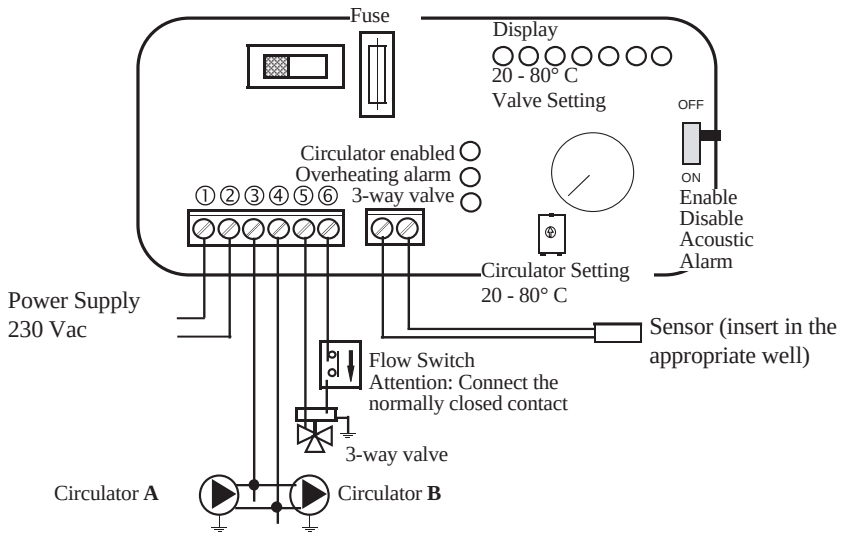

SELECTOR FUNCTIONS

Selector: OFF	Everything is switched off
Selector: MAN	Driven Circulator Valve is set
Selector: AUTO	Circulator is set Valve is set
Alarm selection	No acoustic signal in the OFF position

KIT 3 code 261900

THE INLET AND OUTLET PIPES MUST BE CROSSED FOR THIS TO FUNCTION PROPERLY

SYSTEM FOR AN OPEN TANK INSTALLATION

AN EXAMPLE OF A HYDRAULIC SYSTEM FOR A THERMO FIREPLACEITH HOT SANITARY WATER PRODUCTION AND A WALL MOUNTED BOILER USING KIT N3

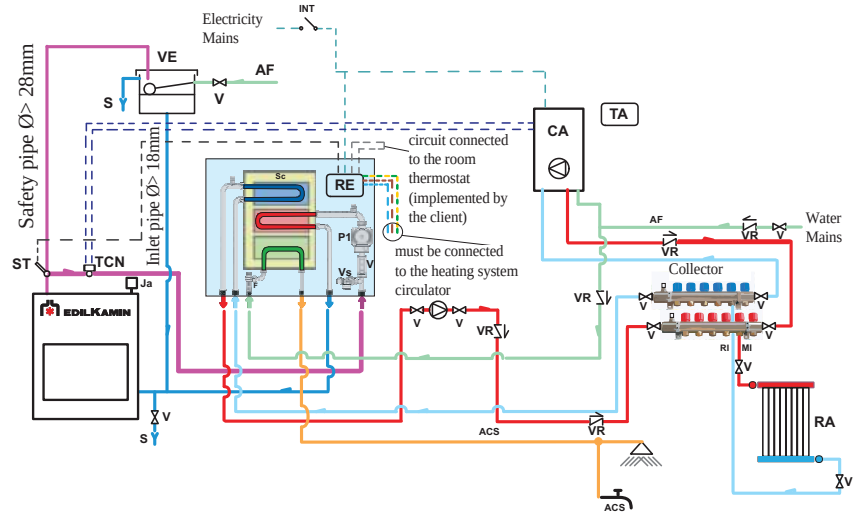

CA:	Wall Mounted Boiler
PR:	Pump (circulator)
P1:	Primary circuit pump
RE:	Electronic regulator
TA:	Room thermostat
VE:	Expansion Tank
Ja:	Air refief Valve
V:	Intercept valve
VR:	Retaining valve
ST:	Temperature Sensor
F:	Flow switch
Sc:	Heat plate exchanger
EV:	3-way solenoid valve
RI:	Heating system return
RA:	Radiators
MI:	Heating system flow
AF:	Cold water
ACS:	Hot sanitary water
S:	Drain

Kit N3 is designed to facilitate the work carried out by the installers. In fact, it consists of all the necessary components for the product to be properly installed.

NB: insulating mats must be applied so that the components of the kit are well-protected from the heat radiation emitted by the thermo-fireplace.

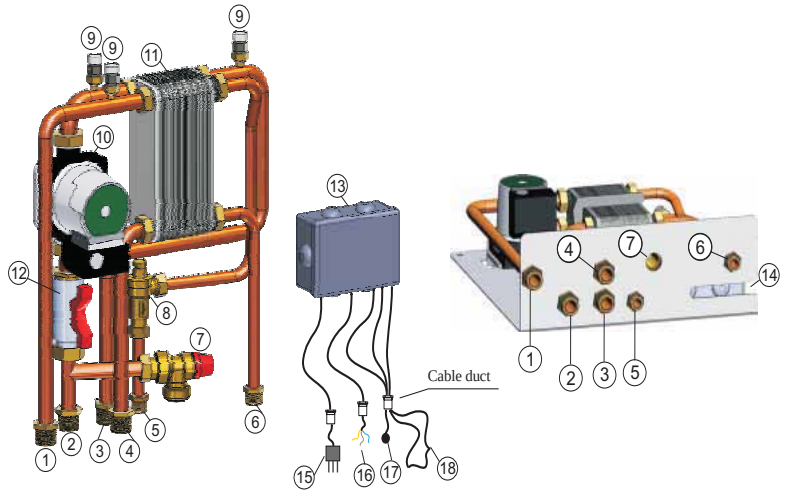

1. Heating system flow G 3/4”
2. EDILKAMIN generator flow G 3/4”
3. EDILKAMIN generator return G 3/4”
4. Heating system return G 3/4”
5. Cold sanitary water inlet G 1/2”
6. Hot water return to the sanitary system G 1/2”
7. Safety valve - temperature and pressure (90 °C - 3bar)
8. Flow Switch
9. Air relief valve G 3/8”
10. EDILKAMIN generator circuit circulator
11. 3-way heat exchanger
12. Intercept valve G 1”
13. Electronic regulator with wiring
14. Appropriate aperture for the cable duct to pass through
15. Power cable
16. Cables for the heating system circulator (phase, neutral, earth)
17. Temperature sensor
18. Room thermostat circuit

Electrical Connections

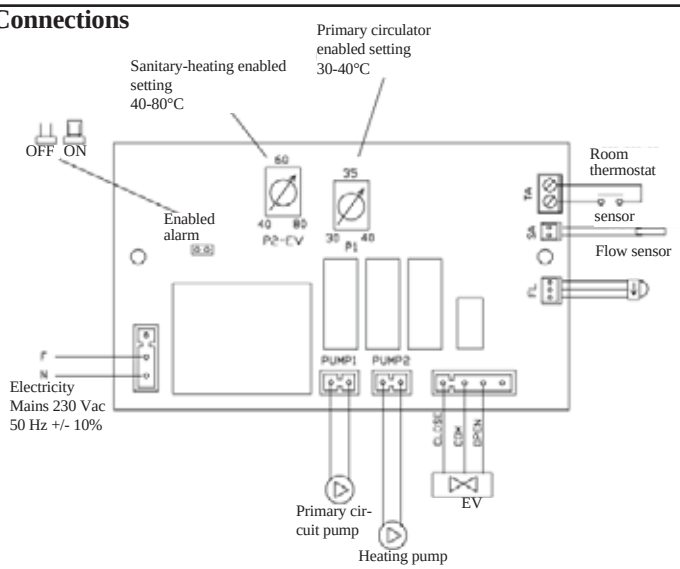

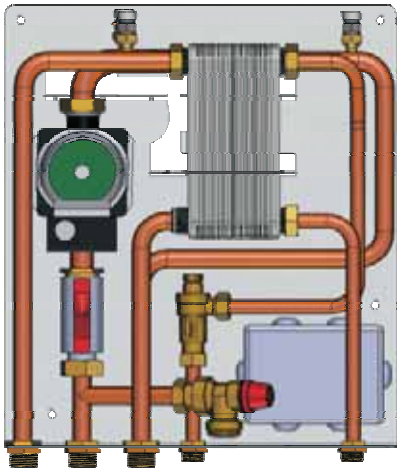

KIT N3 code 627690

THE INLET AND OUTLET PIPES MUST BE CROSSED FOR THIS TO FUNCTION PROPERLY

SYSTEM FOR AN OPEN TANK INSTALLATION

AN EXAMPLE OF A HYDRAULIC SYSTEM FOR A THERMO FIREPLACE WITH HOT SANITARY WATER PRODUCTION AND A WALL MOUNTED BOILER USING KIT N3 BIS

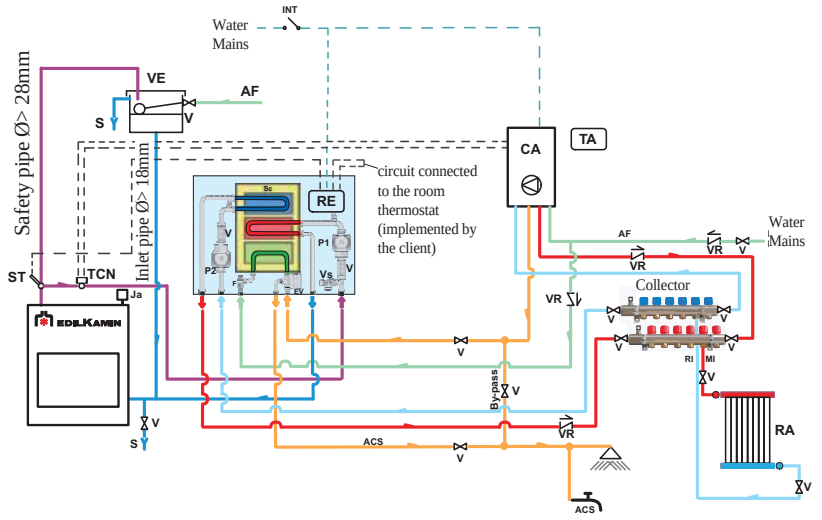

CA	Wall Mounted Boiler
P2	Pump (circulator)
P1	Primary circuit pump
RE	Electronic regulator
TA	Room Thermostat
VE	Expansion Tank
Ja	Air Relief Valve
v	Intercept valve
VR	Retaining valve
ST	Temperature Sensor
F	Flow switch
Sc	Heat Plate Exchanger
EV	3-way Solenoid Valve
RI	Heating system return
RA	Radiators
MI	Heating system flow
AF	Cold Water
ACS	Hot Sanitary Water
S	Drain
INT	Main switch
TCN	**Contact Thermostat**

Kit N3BIS is designed to facilitate the work carried out by the installers. In fact, it consists of all the necessary components for the product to be properly installed.

NB: insulating mats must be applied so that the components of the kit are well-protected from the heat radiation emitted by the thermo-fireplace.

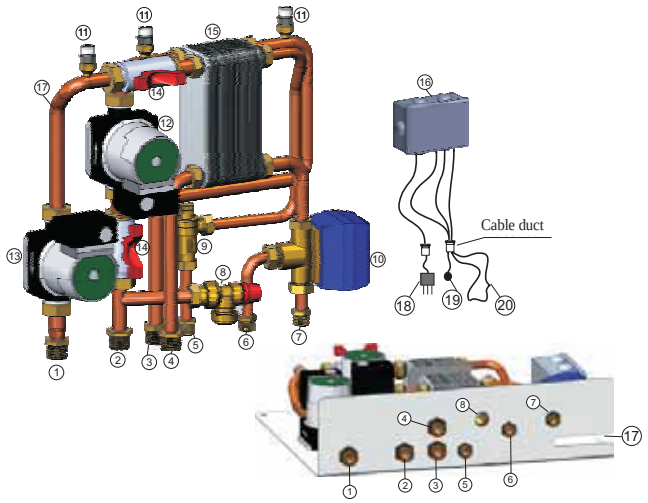

1. Heating system flow G 3/4”
2. EDILKAMIN generator flow G 3/4”
3. EDILKAMIN generator return G 3/4”
4. Heating system return G 3/4”
5. Cold sanitary water inlet G 1/2”
6. Hot water return to the sanitary system G 1/2”
7. Sanitary hot water inlet to the gas boiler G 1/2”
8. Safety valve - temperature and pressure (90 °C - 3bar)
9. Flow Switch
10. 3-way deviation solenoid valve
11. Air relief valve G 3/8”
12. EDILKAMIN generator circuit circulator
13. Heating system circuit circulator
14. Intercept valve G 1”
15. 3-way heat exchanger
16. Electronic regulator with wiring
17. Appropriate aperture for the cable duct to pass through
18. Power cable
19. Temperature sensor
20. Room thermostat circuit

Electrical Connections

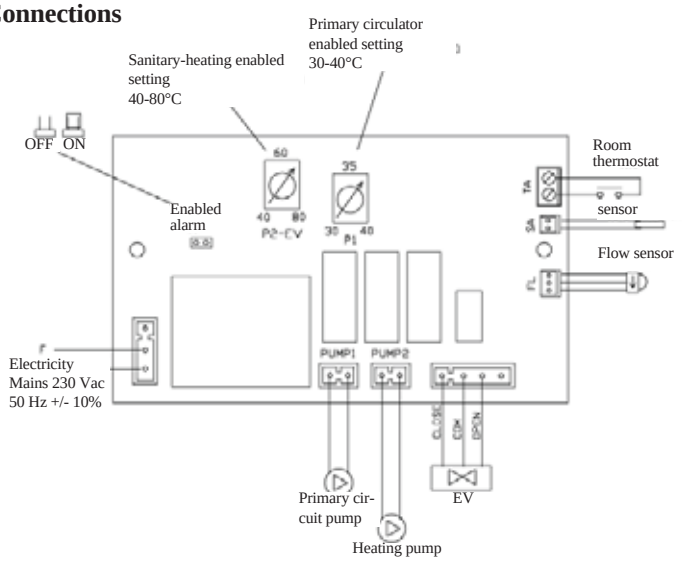

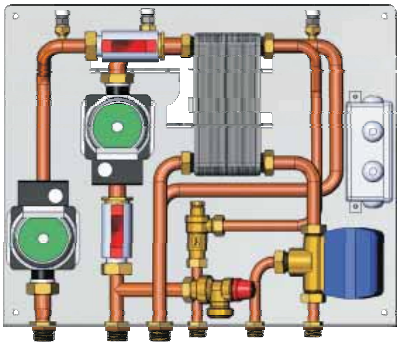

KIT N3 BIS code 627860

THE INLET AND OUTLET PIPES MUST BE CROSSED FOR THIS TO FUNCTION PROPERLY

ELECTRONIC REGULATOR

ENGLISH

IMPORTANT ADVICE REGARDING THE INSTALLATION
The connections, commissioning and verification of proper operation of the fireplace must be carried out by qualified personnel, who can implement all connections in accordance with the laws in force, particularly with Italian Law No. 46/90, apart from complying with these instructions.
Compliance with regulations regarding the earth connection is fundamental for the safety of people.
It is obligatory to install a differential circuit breaker switch before the device and the entire electrical circuit of the thermo fireplace.
It is also obligatory to connect the pump, valve and metal parts of the thermo fireplace to an earthing system.

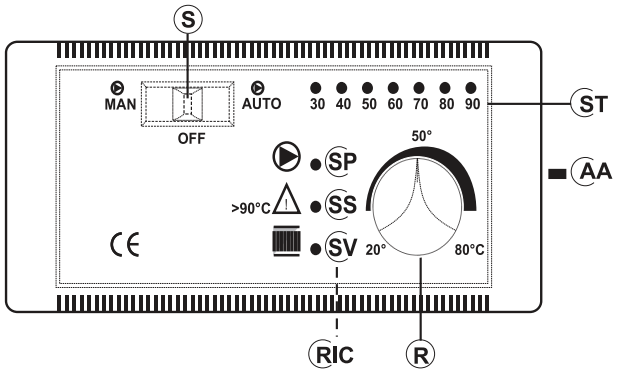

LEGEND

AA	acoustic alarm switch
R	way valve opening setting (KITS 1-3)
R	circulators operation setting (KIT 2)
RIC	internal pump setting
S	MAN-OFF-AUTO selector
SP	pump light
SS	overheating light
ST	temperature scale
SV	3-way valves light (KITS 1-3)
SV	circulators setting (KIT 2)

TECHNICAL DATA	
Power Supply (+15 – 10%)	Vac 230
Degree of protection	IP 40
Min/Max Room Temperature	°C 0÷+50
Sensor range	mt 1,2
Thermometer	°C 30÷90
Maximum contact rating of the circulator	W 400
Maximum contact rating of the 3-way valve	W 250
Fuse	mA 500

The electric control regulator allows you to monitor the operating conditions and is equipped with:
- MAN-OFF-AUTO selector (S)
- temperature scale (ST)
- acoustic alarm (AA)
- 3-way valve opening setting (R) (KIT1-3)
- circulators operation setting (R) (KIT2)
- internal pump setting (RIC)
- 3-way valve light (SV) (KIT1-KIT3)
- circulators setting light (SV) (KIT2)
- overheating pump (SS)
- pump light (SP)

OPERATION
- Control device:
• Thermometer
- Protection device (acoustic alarm system):
• Acoustic alarm (AA)
• Overheating alarm (SS)
This system intervenes when the water temperature exceeds 90° C and warns the user to stop adding fuel.
The acoustic alarm can be disabled from the switch (AA). However, the alarm remains enabled by means of the overheating light (SS). To restore the initial settings, the switch (AA) must be enabled after the water temperature in the thermo fireplace has cooled down.

Power supply device (circulation system):
• MAN-OFF-AUTO selector (S)
• Pump light (SP)
The pump remains on when in manual mode and off when in OFF mode. When in AUTO mode, the pump is activated by the system when the desired temperature is reached, by means of the internal setting (RIC), which ranges from 20 to 80° C (this is pre-set at 20° C).

- Operation device (setting system):
• 3-way valve opening setting (R)
• 3-way valve operating light (SV)
When the fluid reaches the temperature set through the regulator, the 3-way valve diverts the fluid to the radiators and the operating light (SV) goes on.
When the temperature of the fluid drops below the set value, the system opens the electrical circuit and the 3-way valve bypasses the fluid directly to the thermo fireplace.
Attention: During normal operation check that the warning lights (SV) and (SP) are lit.

POSITIONING
The electronic regulator must be installed close to the thermo fireplace. The sensor of the operation, protection and control devices must be placed directly on the thermo fireplace or at most on the flow pipe, no more than 5 cm away from the thermo fireplace and in any case before any intercepting device. The sensor must be immersed in the well.

INSTALLATION
The power supply must be disconnected from the mains and the AUTO-OFF-MAN selector (S) must be in the OFF position when all these operations are carried out.
Follow this procedure to install the electronic regulator correctly: loosen the fastening screw, remove the cover and fasten it in place against the wall with the dowels supplied.
Then make the connections, paying utmost attention to the wiring diagram and pass the wires through ducts that are in conformity with the regulations in force. Put the cover back in place and tighten the screw.
Connect the brown wire (phase) and blue wire (neutral) of the 3-way Valve, respectively, to terminals 5 and 6 of the regulator. Connect the yellow/green wire to the earth.
Follow the assembly instructions contained in the package to connect the regulator to the system properly.

OPTIONAL ACCESSORIES

ELECTRONIC REGULATOR (Optional)

This lets you monitor the operating conditions and is equipped with:

- MAN-OFF-AUTO selector
- temperature scale
- acoustic alarm
- 3-way valve opening setting
- internal pump setting
- pump light
- 3-way valve light
- overheating light

Electronic Regulator (220780)

The electronic regulator is part of various types of installation kits (supplied as optionals)

HEAT EXCHANGER 20-PLATE FOR SANITARY WATER (Optional)

This is a very simple and inexpensive device with guaranteed performance that produces 13-14 litres of hot water per minute according to the power plant. It is easily installed on the flow pipe to the radiators, in the most suitable position according to the layout of the system. This has the great advantage of being removed for maintenance or replacement without affecting the thermo fireplace.

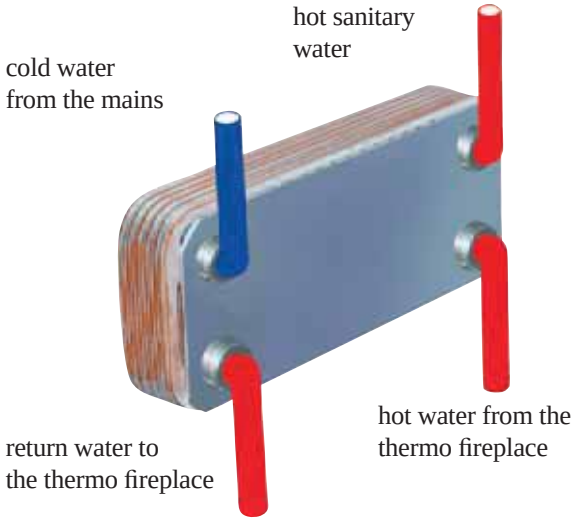

The 20-plate heat exchanger is part of various types of installation kits (supplied as optionals)

EXCHANGER 3-WAY (optional)

It produces hot water for a domestic circuit and a secondary circuit (radiators), excluding, with respect to KIT 3, use of 3-way valve and a plate heat exchanger.

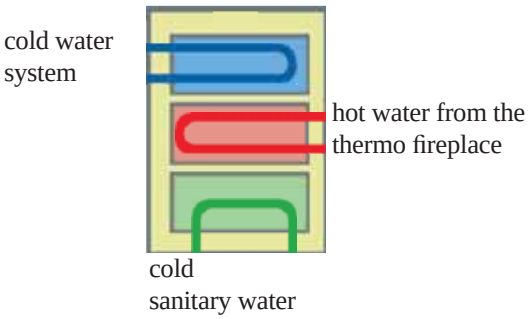

Valves Kit (421600) consisting of: automatic air relief valve, 1.5 bar safety valve, 90 ° C thermal relief valve

1 ” 3-way valve (143330) to set the water flow to the system

Flow Switch (220830)

H_2OCEANO 15 - RISER FEET KIT raises the fireplace unit from 14 to 19 cm from the floor
H_2OCEANO 23 - RISER FEET KIT raises the fireplace unit from 12 to 17 cm from the floor
H_2OCEANO 28 - RISER FEET KIT raises the fireplace unit from 12 to 17 cm from the floor

Exchanger 3-way
code 627780

Circulator
UPS 25-50 code 219660
UPS 25-60 code 238270

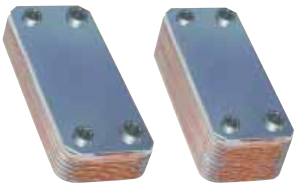

20-plate Heat Exchanger for sanitary water (262570)

30-plate Heat Exchanger for sanitary water (216620)

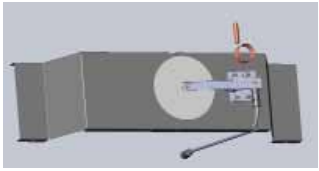

Thermostatic valve
H_2OCEANO 15 code 739460
H_2OCEANO 23 code 739440
H_2OCEANO 28 code 739450

Inlet frame
H_2OCEANO 15 code 739390 - dim. 63x63 cm
H_2OCEANO 23 code 739370 - dim. 77x68 cm
H_2OCEANO 28 code 739380 - dim. 95x68 cm

Roaster
H_2OCEANO 15 code 750820
H_2OCEANO 23 code 234560
H_2OCEANO 28 code 236710

Support for hydraulic kits A1-A2-B-C-D (installation on right)
H_2OCEANO 15 code 739510
H_2OCEANO 23 code 739470
H_2OCEANO 28 code 739490

Hydraulic kit V for OPEN TANK versions code 743430 (installation on right)

Remote dispaly
code 741180

ENGLISH

H_2OCEANO 15

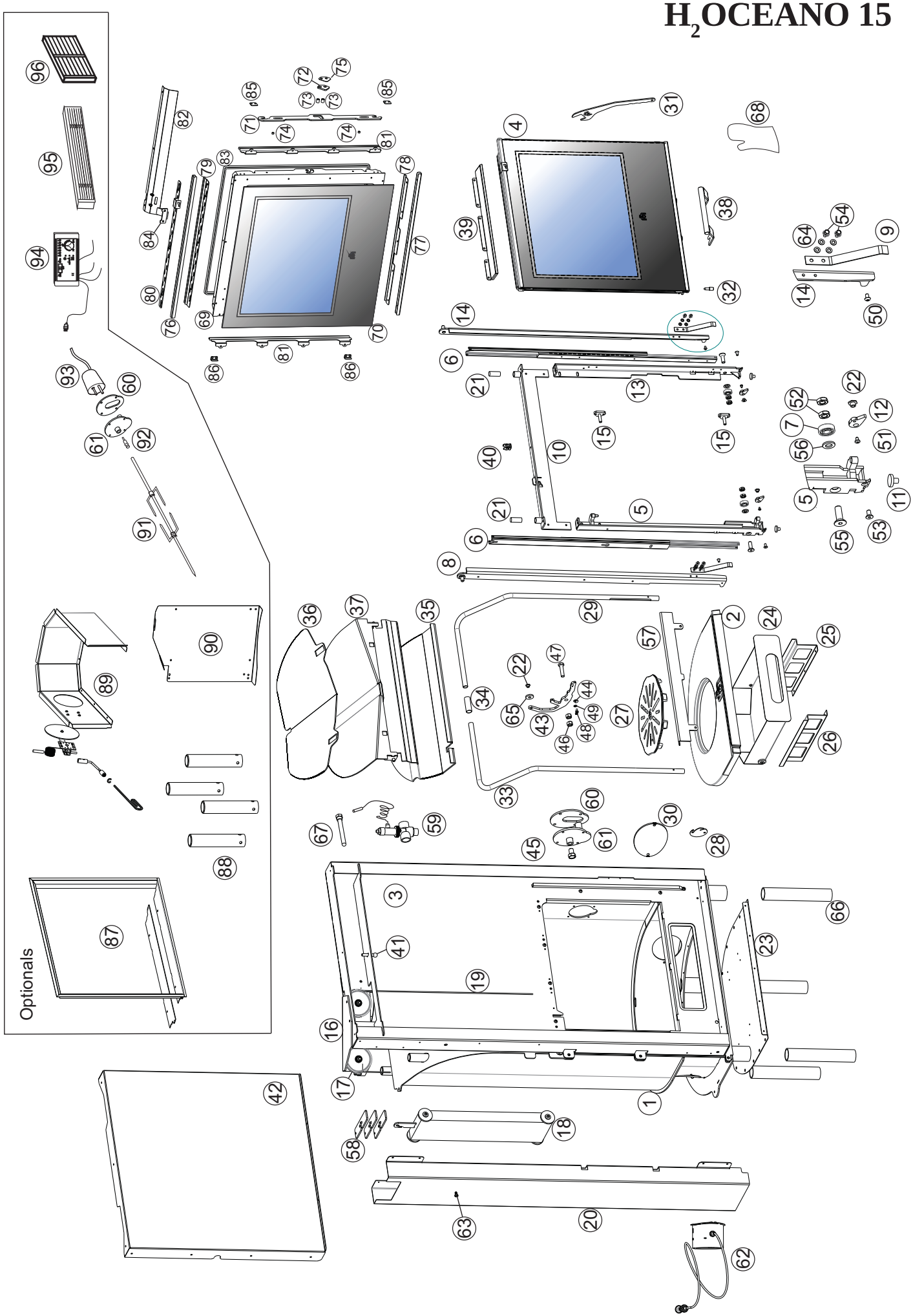

	ITALIANO	ENGLISH	FRANÇAIS	ESPAÑOL	DEUTSCH	NEDERLANDS	pz.
1	Struttura saldata VA	Bolier structure open tank	Structure chaudière vase ouvert	Estructura de la caldera vaso abierto	Heizkesselkörper offene sausdehnungsgefäss	Ketelstructuur open vat	1
1	* Struttura saldata VC	* Bolier structure closed tank	* Structure chaudière vase fermé	* Estructura de la caldera vaso cerrado	* Heizkesselkörper geschlossenes ausdehnungsgefäss	* Ketelstructuur gesloten vat	1
2	Piano fuoco in ghisa	Hearth made of cast iron	Plan feu en fonte	Plano del fuego en hierro fundido	Brennraumboden aus Gusseisen	Vuuroppervlak in gietijzer	1
3	Assieme frontale	Front assembly	Ensemble frontal	Grupo frontal	Frontale Einheit	Voorkant	1
4	Assieme anta montata	Mounted door assembly	Ensemble porte montée	Grupo puerta montada	Baugruppe montierter Türflügel	Gemonteerde deur	1
5	Assieme scorrimento Sx	Left slider	Coulisse gauche	Desplazamiento izqdo.	Knagge	Afvoer links	1
6	Guide scorrimento	Slider guide	Guides de coulissage	Guías de desplazamiento	Wärmeschutzgriff zur Türöffnung	Geleiders afvoer	1
7	Cuscinetto	Bearing	Coussinet	Cojinete	Lager	Dempertje	2
8	Assieme porta scorrevole sx	LT sliding door assembly	Ensemble porte coulissante gauche	Grupo puerta corredera izq.	Baugruppe Schiebetür links	Schuifdeur l	1
9	Molla spinta anta	Door push spring	Ressort de poussée porte	Muelle empuje puerta	Druckfeder Türflügel	Duwveer deur	2
10	Profilo giunizione scorrimenti	Slide coupling profile	Profil de jonction coulissements	Perfil unión deslizamientos	Verbindungsprofil Gleitlauf	Profiel verbinding schuiven	1
11	Gommino	Pad	Bouchon	Tapón de goma	Gummi	Pakking	2
12	Leva sicurezza per chiusura	Safety lever for closure	Levier sécurité pour fermeture	Palanca de seguridad para cierre	Sicherheitshebel für Verriegelung	Veiligheidshendel voor afsluiting	2
13	Assieme scorrimento Dx	Right slider	Coulisse droite	Desplazamiento dcho	Stift für Türaufhängung	Afvoer rechts	1
14	Assieme porta scorrevole dx	RT sliding door assembly	Ensemble porte coulissante droite	Grupo puerta corredera dch.	Baugruppe Schiebetür rechts	Schuifdeur r	1
15	Assieme perno serratura	Lock pin assembly	Ensemble goujon serrure	Grupo perno cerradura	Baugruppe Verriegelungsstift	Pen slot	2
16	Assieme porta puleggie	Pulley holder assembly	Ensemble porte poulies	Grupo porta poleas	Einheit Tür Riemenscheiben	Deur met katrollen	1
17	Puleggia con boccola	Pulley with bushing	Poulie avec douille	Polea con casquillo	Seilscheibe mit Lager	Katrol met bus	2
18	Assieme contrappeso	Counterbalance	Contrepoids	Contrapeso	Gegengewicht	Contragewicht	1
19	Fune L.1000 mm	Counterbalance rope L.1000 mm	Câble contrepoids L.1000 mm	Cable contrapeso L.1000 mm	Gegengewicht-Seil L.1000 mm	Kabel contragewicht L.1000 mm	1
20	Carter contrappeso	Interchangeable counterbalance casing	Carter contrepoids	Cárter contrapeso	Beidseitiges Gegengewicht-Gehäuse	Bekleding contragewicht	1
21	Fermo silicone D15	Silicone stop D15	Crochet silicone D15	Tope silicona D15	Silikonsicherung D15	Siliconen pal D15	2
22	Bussola filettata fissaggio sicurezze	Threaded safety device fixing bush	Douille filetée fixation sécurités	Casquillo roscado fijación protecciones	Gewindehülse Befestigung Sicherheitseinrichtungen	Bus schroefdraad bevestiging bev.	3
23	Lamiera base	Base sheet	Tôle base	Chapa base	Sockelblech	Basisplaat	1
24	Assieme cassetto cenere	Ash pan assembly	Ensemble tiroir cendres	Grupo cajón cenizas	Aschenladen-Einheit	Aslade	1
25	Supporto cassetto cenere destro	RT Ash pan support	Support tiroir à cendres droite	Soporte cajón cenizas dch.	Halterung Aschenlade rechts	Steun aslade rechts	1
26	Supporto cassetto cenere sinistro	LT Ash pan support	Support tiroir à cendres gauche	Soporte cajón cenizas izq.	Halterung Aschenlade links	Steun aslade links	1
27	Griglia cenere	Ash grill	Grille cendres	Parrilla cenizas	Aschenbehälter	Asla	1
28	Lamierino chiusura passaggio sonda	Probe passage closure plate	Tôle fine pour fermeture du passage sonde	Chapa de cierre paso sonda	Verriegelungsblech für Sondendurchgang	Sluitplaatje doorgang meter	1
29	Tubo post-combustione dx	RT post-combustion tube	Tuyau post-combustion droit	Tubo post-combustión dch.	Nachverbrennungsrohr rechts	Leiding post-verbranding r	1
30	Copertura entrata aria	Air inlet covering	Revêtement entrée air	Cubierta entrada de aire	Abdeckung Lufteinlass	Afdekplaat luchtinvoer	1
31	Manofredda	Cold hand	Main froide	Manofría	Kalthandgriff	Koude	1
32	Perno regolazione M10	M10 adjustment pin	Axe de réglage M10	Perno regulación M10	Einstellstift M10	Stelpen M10	1
33	Tubo post-combustione sx	LT post-combustion tube	Tuyau post-combustion gauche	Tubo post-combustión izq.	Nachverbrennungsrohr links	Leiding post-verbranding l	1
34	Manicotto giunzione tubo post-comb.	Post-combustion connection sleeve	Manchon joint tuyau post-comb.	Manguito unión tubo post-comb.	Verbindungsstutzen Nachverbrennungsrohr	Verbindingsmof leiding post-verb.	1
35	Cielino basso	Low ceiling	Plafond bas	Parte superior baja	Niedrige Decke	Lage bovenkant	1
36	Controcielino	Drop ceiling	Faux-plafond	Contra parte superior	Zwischendecke	Bovenkant	1
37	Assieme cielino con valvola	Ceiling assembly with valve	Ensemble plafond avec vanne	Grupo parte superior con válvula	Baugruppe Decke mit Ventil	Bovenkant met klep	1
38	Maniglia antina asportabile	Removable door handle	Poignée porte amovible	Manija puerta pequeña extraíble	Abnehmbarer Türgriff	Afneembaar handvat deurtje	1
39	Deflettore superiore fumo	Upper smoke deflector	Déflecteur supérieur fumée	Deflector superior humo	Oberes Rauchleitblech	Rook keerschot boven	1
40	Molla di ritegno	Retaining spring	Ressort de retenue	Muelle de retención	Haltefeder	Terugslagveer	1
41	Perno bloccaggio	Locking pin	Goujon de blocage	Perno bloqueo	Blockierstift	Vergrendelpal	1
42	Carter frontale	Front casing	Carter frontal	Cárter frontal	Frontabdeckung	Bekleding voorkant	1
43	Leva comando farfalla fumi	Smoke butterfly valve control lever	Levier commande papillon des fumées	Palanca de mando de mariposa para humos	Bedienungshebel Rauchdrossel	Bedieningshendel rookklep	1
44	Eccentrico by pass	By-pass eccentric	Came by-pass	Excéntrico by pass	Exzenter Bypass	Excentrische bypass	1
45	Vite T.E. M14 x 20	Screws T.E. M14 x 20	Vis T.E. M14 x 20	Tornillo T.E. M14 x 20	Schraube T.E. M14 x 20	Schroef T.E. M14 x 20	1
46	Dado M10	Nut M10	Écrou M10	Tuerca M10	Mutter M10	Moer M10	2
47	Vite T.E. M10x40	Screws T.E. M10x40	Vis T.E. M10x40	Tornillo T.E. M10x40	Schraube T.E. M10x40	Schroef T.E. M10x40	1
48	Vite T.E. M4X8	Screws T.E. M4X8	Vis T.E. M4X8	Tornillo T.E. M4X8	Schraube T.E. M4X8	Schroef T.E. M4X8	2

	ITALIANO	ENGLISH	FRANÇAIS	ESPAÑOL	DEUTSCH	NEDERLANDS	pz.
49	Rondella piana D4	Flat washer D4	Rondelle plate D4	Arandela plana D4	Flache Unterlegscheibe D4	Platte ring D4	1
50	Vite zinc nera t.t.bomb.ei int. M5x8	T.T.B internal hexag screw M5x8	Vis tête ronde bombée hexagonale intérieur M5x8	TornilloT.T.B hexag interno M5x8	Schraube mitRundkopf undInnensechskant M5x8	SchroefT.T.B zesk. intern M8x25	2
51	Vite aut-tcl-tcr s/pu 4,2x6,5	Screws TCL-TCR 4,2x6,5	Vis TCL-TCR 4,2x6,5	Tornillo TCL-TCR 4,2x6,5	Schraube TCL-TCR 4,2x6,5	Schroef TCL-TCR 4,2x6,5	2
52	Dado basso M10	M10 low nut	Écrou bas M10	Tuerca baja M10	Mutter niedrig M10	Lage moer M10	4
53	Vite tsp -cava esag. M6X12	TSP allen head screw M6X12	Vis TSP tête cylindrique pans M6X12	Tornillo TSP cab hexágono M6X12	Zyl.-Kopf-Inbusschraube TSP M6X12	Schroef TSP cav zeskant M6X12	2
54	Vite T.E. C.C. M5x8	ScrewsT.E. C.C. M5x8	VisT.E. C.C. M5x8	TornilloT.E. C.C. M5x8	SchraubeT.E. C.C. M5x8	Schroef T.E. C.C. M5x8	4
55	Vite TSP cava es M10x30	TSP allen head screw M10x30	Vis TSP tête cylindrique pans M10x30	Tornillo TSP cab hexágono M10x30	Zyl.-Kopf-Inbusschraube TSP M10x30	Schroef TSP cav zeskant M10x30	2
56	Rondella D5	Washer D5	Rondelle D5	Arandela D5	Unterlegscheibe D5	Ring D5	2
57	Paralegna	Log retainer	Pare-buche	Protección leña	Holzschutzleiste	Houtscherm	1
58	Lamiera aumento contrappeso	Balance sheet growth	Croissance du bilan	Balance de crecimiento de la hoja	Bilanzentwicklung	Balans groei	1
59	*Valvola scarico sicurezza termica con pozzetto	*Safety thermal relief valve with well	*Soupape décharge sécurité thermique avec logem	*Válvula de descarga de seguridad térmica con pozo	*Überhitzungsschutzventil mit Schacht	*Afvoerklep thermische veiligheid met put	1
60	Guarnizione carta ceramica girrarosto	Rotisserie ceramic paper gasket	Joint papier céramique pour tournebroche	Empaquetadura papel cerámica rustidor	Keramikpapierdichtung Bratspieß	Papieren pakking keramiek spit	1
61	Supporto girarrosto	Rotisserie support	Support tournebroche	Soporte rustidor	Halter für Bratspieß	Steun spit	1
62	Meccanismo presa aria	External air inlet mechanism	Mécanisme prise d'air externe	Mecanismo toma de aire externo	Außenlufteinlassmechanismus	Mechanisme externe luchtinlaat	1
63	Vite aut t.e.brun 6.3x25	ScrewsT.E. M 6.3x25	VisT.E. M6.3x25	TornilloT.E. M6.3x25	SchraubeT.E. M6.3x25	Schroef T.E. M6.3x25	1
64	Rondella D5	Washer D5	Rondelle D5	Arandela D5	Unterlegscheibe D5	Ring D5	8
65	Ruota battuta su by pass	Stop wheel on by-pass	Roue butée sur by-pass	Rueda tope en by pass	Anschlagrad auf Bypass	Wieltje op bypass	1
66	Piede di riporto	Return foot	Pied de soutien	Pie de recubrimiento	Aufbaufuß	Poot	4
67	Ogiva per sonde	Ogive for probes	Ogive pour sonde	Caperuza para sondas	Dichtkegel für Sonde	Meterhouder	1
68	Guanto	Glove	Gant	Guante	Schutzhandschuh	Handschoen	1
69	Assieme anta saldata	Welded door assembly	Ensemble porte soudée	Grupo puerta soldada	Baugruppe geschweißter Türflügel	Gelaste deur	1
70	Vetro	Glass	Vitre	Vidrio	Scheiibe	Glas	1
71	Chiavistello	Bolt	Verrou	Pestillo	Riegel	Slot	1
72	Comando chiavistello	Bolt control	Commande verrou	Mando pestillo	Riegel Bedienelement	Bediening klik	1
73	Busoola serratura	Lock bushing	Douille serrure	Casquillo cerradura	Verriegelungsbuchse	Bus slot	2
74	Bussola guida serratura	Lock guide bushing	Douille guide serrure	Casquillo guía cerradura	Führungsbuchse Verriegelung	Bus geleider slot	2
75	Copertura com.do chiavistello	Bolt control cover	Couverture commande verrou	Cubierta mando pestillo	Abdeckung Riegel Bedienelement	Afdekking bediening slot	1
76	Fermavetro superiore	Holder glass holders	Pare-closes supèrieur	Sujeta vidrios superior	Obere Glashalteleisten	Glashouder onderste	1
77	Fermavetro inferiore	Lower glass holders	Pare-closes infèrieur	Sujeta vidrios inferior	Linke Glashalteleisten	Glashouder bonveste	1
78	Fermaguarnizione iinferiore	Lower gasket stop	Arrêt joint inférieur	Tope empaquetadura inferior	Befestigung für untere Dichtung	Pal pakking onder	1
79	Fermaguarnizione superiore	Lower gasket stop	Arrêt joint inférieur	Tope empaquetadura inferior	Befestigung für untere Dichtung	Pal pakking onder	1
80	Serranda aria	Air damper	Trappe air	Compuerta de aire	Luftklappe	Luchtklep	1
81	Fermaguarnizione laterale	Side gasket stop	Bloc-joint latéral	Protección empaquetadura lateral	Seitliche Dichtungssperrung	Klem pakking zijkant	2
82	Convogliatore aria anta	Door air conveyor	Convoyeur air porte	Transportador aire puerta	Luftableitblech Türflügel	Rookgeleider deur	1
83	Guarnizione	Gasket	Garniture	Junta	Dichtun	Afsluiting	1
84	Attuatore by pass fumi	Smoke by-pass actuator	Actionneur by-pass fumées	Actuador by pass de humos	Stellantrieb Rauch-Bypass	Actuator bypass rook	1
85	Piastra battuta vetro	Plate glass joke	Blague Verre plat	Placa de vidrio de broma	Flachglas Witz	Spiegelglas grap	2
86	Piastrina dx fermavetro	Right bead plate	Droit plaque de talon	Placa de cordón derecho	Rechts Wulstplatte	Rechts kraal plaat	2
87	Assieme cornice rastremata	Tapered frame assembly	Ensemble cadre fuselé	Grupo marco ahusado	Baugruppe verjüngter Rahmen	Gelaste deur	1
88	Kit idraulico supporto	Support hydraulic kit	Kit hydraulique support	Kit hidráulico soporte	Halterung Hydraulik-Kit	Conische steun	1
89	Kit regolazione aria automatica	Automatic air regulation kit	Kit de réglage air automatique	Kit regulación de aire automática	Kit für automatischen Luftregler	Automatische regeling lucht	1
90	Piede rialzo KIT	Kit lifting foot	Pied de réhaussement KIT	Pie elevación KIT	KIT Fußerhöhung	Pootje KIT	1
91	Asta girarrosto (optional)	Spit rod (optional)	Tige broche (optional)	Varilla espetón (opcional)	Bratspieß (optional)	Spitstaaf (optioneel)	1
92	Prolunga asta girarrosto (optional)	Roaster rod extension (optional)	Rallonge tige tournebroche (optional)	Extensión varilla rustidor (opcional)	Bratspießverlängerung (optional)	Verlenging spitstaaf (optioneel)	1
93	Motorino elettrico girarrosto (optional)	Roaster electric motor (optional)	Moteur électrique tournebroche (optional)	Extensión varilla rustidor (opcional)	Elektromotor Bratspieß (optional)	Elektromotortje spit (optioneel)	1
94	Regolatore elettronico (optional)	Electronic regulator (optional)	Régulateur électronique (optional)	Regulador electrónico (opcional)	Elektronischer Regler (optional)	Elektronische regelaar (optioneel)	1
95	Griglia uscita aria interna controcappa (optional)	Mantel air outlet grille (optional)	Grille sortie air contre-hotte (en option)	Rejilla salida del aire contra campana (opcional)	Luftauslassgitter Rauchfangabdeckung (auf Wunsch)	Rooster rookafvoer beschermlaag (optie)	1
96	Griglia presa aria esterna (optional)	External air inlet grille (optional)	Grille prise d'air externe (optional)	Rejilla toma aire externa (opcional)	Gitter für Außenlufteinlass (optional)	Rooster externe luchtinlaat (optioneel)	1
-	*** solo per versione con serpentina (installazione a Vaso Chiuso)**	*** only for versions with a coil (closed Tank installation)**	*** seulement pour version avec serpentin (installation à vase fermé)**	*** solo para versión con serpentín (instalación con vaso cerrado**	*** nur für Ausführung mit Rohrschlange (Installation mit geschlossenem Ausdehnungsgefäß)**	*** Uitsluitend in het geval van de versie met spiraal (installatie met gesloten expansievat)**	-

H_2OCEANO 23

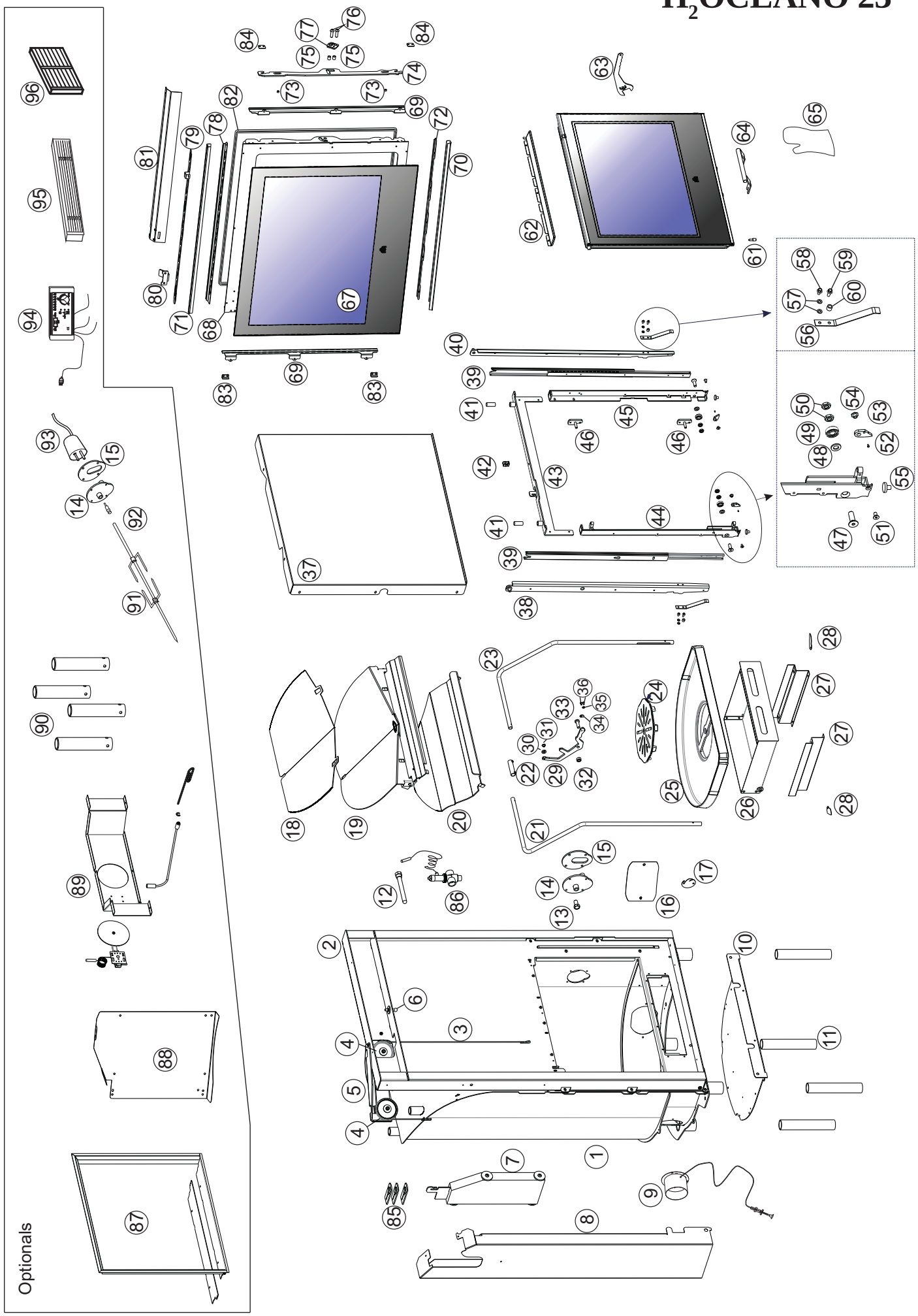

H_2OCEANO 28

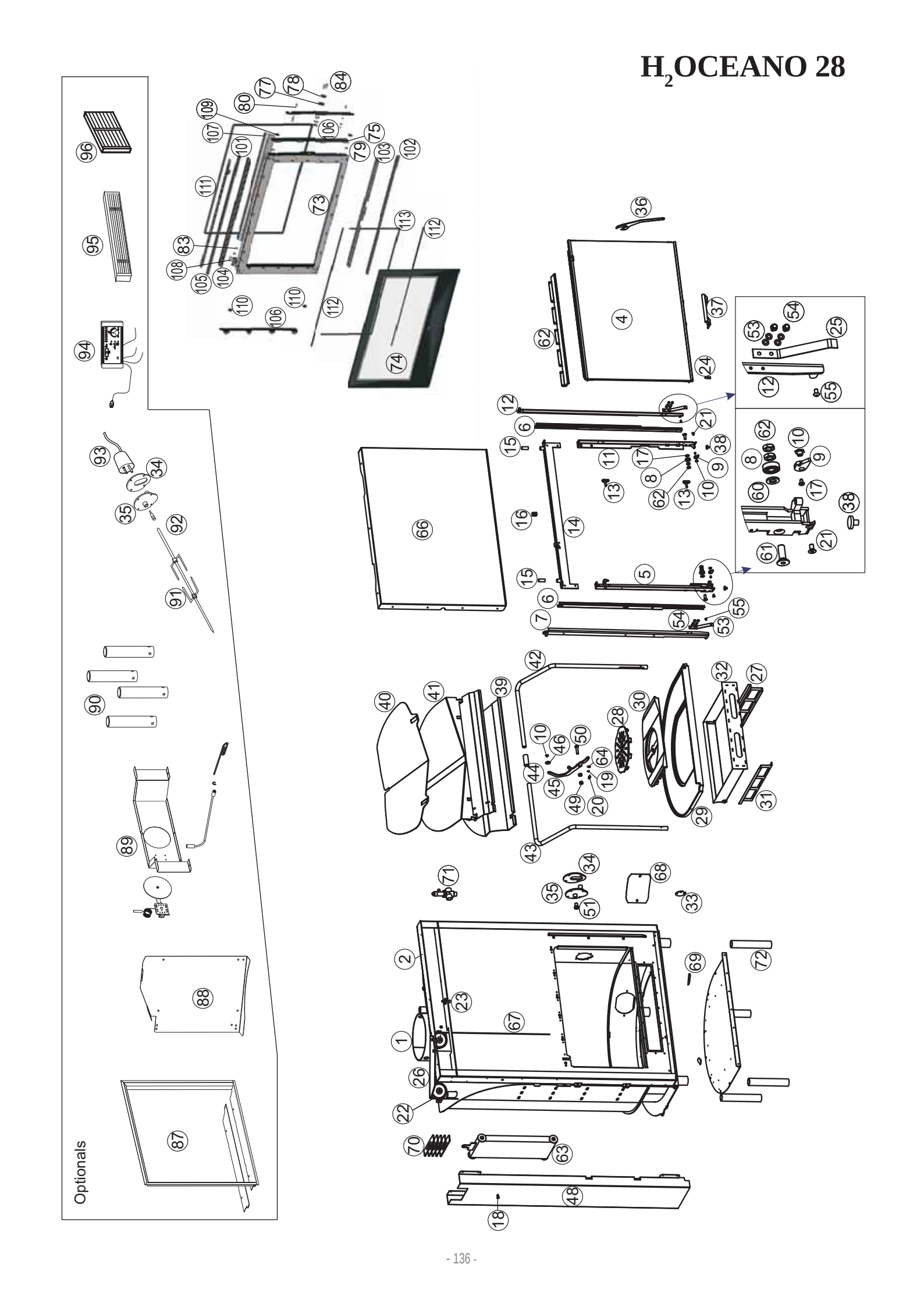

	ITALIANO	ENGLISH	FRANÇAIS	ESPAÑOL	DEUTSCH	NEDERLANDS	pz.
1	* Struttura vaso chiuso	* Bolier structure closed tank	* Structure chaudière vase fermé	* Estructura de la caldera vaso cerrado	* Heizkesselkörper geschlossenes ausdehnungsgefäss	* Ketelstructuur gesloten vat	1
2	Assieme frontale	Front assembly	Ensemble frontal	Grupo frontal	Frontale Einheit	Voorkant	1
3	Lamiera base	Base sheet	Tôle base	Chapa base	Sockelblech	Basisplaat	1
4	Assieme anta saldata	Welded door assembly	Ensemble porte soudée	Grupo puerta soldada	Baugruppe geschweißter Türflügel	Gelaste deur	1
5	Assieme scorrimento Sx	Left slider	Coulisse gauche	Desplazamiento izqdo.	Knagge	Afvoer links	1
6	Guide scorrimento	Slider guide	Guides de coulissage	Guías de desplazamiento	Wärmeschutzgriff zur Türöffnung	Geleiders afvoer	2
7	Assieme porta scorrevole sx	LT sliding door assembly	Ensemble porte coulissante gauche	Grupo puerta corredera izq.	Baugruppe Schiebetür links	Schuifdeur l	1
8	Cuscinetto	Bearing	Coussinet	Cojinete	Lager	Dempertje	2
9	Leva sicurezza per chiusura	Safety lever for closure	Levier sécurité pour fermeture	Palanca de seguridad para cierre	Sicherheitshebel für Verriegelung	Veiligheidshendel voor afsluiting	2
10	Bussola	Bush	Douille	Casquillo	Buchse	Bus	3
11	Assieme scorrimento Dx	Right slider	Coulisse droite	Desplazamiento dcho	Stift für Türaufhängung	Afvoer rechts	1
12	Assieme porta scorrevole dx	RT sliding door assembly	Ensemble porte coulissante droite	Grupo puerta corredera dch.	Baugruppe Schiebetür rechts	Schuifdeur r	1
13	Assieme perno serratura	Lock pin assembly	Ensemble goujon serrure	Grupo perno cerradura	Baugruppe Verriegelungsstift	Pen slot	2
14	Profilo giunizione scorrimenti	Slide coupling profile	Profil de jonction coulissements	Perfil unión deslizamientos	Verbindungsprofil Gleitlauf	Profiel verbinding schuiven	1
15	Fermo silicone D15	Silicone stop D15	Crochet silicone D15	Tope silicona D15	Silikonsicherung D15	Siliconen pal D15	2
16	Molla di ritegno	Retaining spring	Ressort de retenue	Muelle de retención	Haltefeder	Terugslagveer	1
17	Vite aut-TCL-TCR 4,2x6,5	Screws TCL-TCR 4,2x6,5	Vis TCL-TCR 4,2x6,5	Tornillo TCL-TCR 4,2x6,5	Schraube TCL-TCR 4,2x6,5	Schroef TCL-TCR 4,2x6,5	3
18	Vite T.E. M 6,3 x 25	Screws T.E. M 6,3 x 25	Vis T.E. M 6,3 x 25	Tornillo T.E. M 6,3 x 25	Schraube T.E. M 6,3 x 25	Schroef T.E. M 6,3 x 25	1
19	Rondella piana D4	Flat washer D4	Rondelle plate D4	Arandela plana D4	Flache Unterlegscheibe D4	Platte ring D4	1
20	Vite T.E. M4x8	Screws T.E. M4x8	Vis T.E. M4x8	Tornillo T.E. M4x8	Schraube T.E. M4x8	Schroef T.E. M4x8	2
21	Vite TSP -cava esag. M6X12	TSP allen head screw M6X12	Vis TSP tête cylindrique pans M6X12	Tornillo TSP cab hexágono M6X12	Zyl.-Kopf-Inbusschraube TSP M6X12	Schroef TSP cav zeskant M6X12	2
22	Puleggia con boccola	Pulley with bushing	Poulie avec douille	Polea con casquillo	Seilscheibe mit Lager	Katrol met bus	2
23	Perno bloccaggio	Locking pin	Goujon de blocage	Perno bloqueo	Blockierstift	Vergrendelpal	1
24	Perno regolazione M10	M10 adjustment pin	Axe de réglage M10	Perno regulación M10	Einstellstift M10	Stelpen M10	1
25	Molla spinta anta	Door push spring	Ressort de poussée porte	Muelle empuje puerta	Druckfeder Türflügel	Duwveer deur	2
26	Assieme porta puleggie	Pulley holder assembly	Ensemble porte poulies	Grupo porta poleas	Einheit Tür Riemenscheiben	Deur met katrollen	1
27	Supporto cassetto cenere destro	RT Ash pan support	Support tiroir à cendres droite	Soporte cajón cenizas dch.	Halterung Aschenlade rechts	Steun aslade rechts	1
28	Griglia cenere	Ash grill	Grille cendres	Parrilla cenizas	Aschenbehälter	Asla	1
29	Piano fuoco in ghisa	Hearth made of cast iron	Plan feu en fonte	Plano del fuego en hierro fundido	Brennraumboden aus Gusseisen	Vuuroppervlak in gietijzer	1
30	Piano fuoco in ghisa centrale	Hearth made of cast iron center	Plan feu en fonte centre	Plano del fuego en hierro fundido central	Brennraumboden aus Gusseisen zentrum	Vuuroppervlak in gietijzer centrum	1
31	Supporto cassetto cenere sinistro	LT Ash pan support	Support tiroir à cendres gauche	Soporte cajón cenizas izq.	Halterung Aschenlade links	Steun aslade links	1
32	Cassetto cenere	Ash pan	Tiroir cendres	Cajón cenizas	Aschenladen-Einheit	Aslade	1
33	Lamierino chiusura passaggio sonda	Probe passage closure plate	Tôle fine pour fermeture du passage sonde	Chapa de cierre paso sonda	Verriegelungsblech für Sondendurchgang	Sluitplaatje doorgang meter	1
34	Guarnizione carta ceramica girrarosto	Rotisserie ceramic paper gasket	Joint papier céramique pour tournebroche	Empaquetadura papel cerámica rustidor	Keramikpapierdichtung Bratspieß	Papieren pakking keramiek spit	1
35	Supporto girarrosto	Rotisserie support	Support tournebroche	Soporte rustidor	Halter für Bratspieß	Steun spit	1
36	Manofredda	Cold hand	Main froide	Manofría	Kalthandgriff	Koude	1
37	Maniglia antina asportabile	Removable door handle	Poignée porte amovible	Manija puerta pequeña extraíble	Abnehmbarer Türgriff	Afneembaar handvat deurtje	1
38	Gommino	Pad	Bouchon	Tapón de goma	Gummi	Pakking	2
39	Cielino basso	Low ceiling	Plafond bas	Parte superior baja	Niedrige Decke	Lage bovenkant	1
40	Controcielino	Drop ceiling	Faux-plafond	Contra parte superior	Zwischendecke	Bovenkant	1
41	Assieme cielino con valvola	Ceiling assembly with valve	Ensemble plafond avec vanne	Grupo parte superior con válvula	Baugruppe Decke mit Ventil	Bovenkant met klep	1
42	Tubo post-combustione dx	RT post-combustion tube	Tuyau post-combustion droit	Tubo post-combustión dch.	Nachverbrennungsrohr rechts	Leiding post-verbranding r	1
43	Tubo post-combustione sx	LT post-combustion tube	Tuyau post-combustion gauche	Tubo post-combustión izq.	Nachverbrennungsrohr links	Leiding post-verbranding l	1
44	Manicotto giunzione tubo post-comb.	Post-combustion connection sleeve	Manchon joint tuyau post-comb.	Manguito unión tubo post-comb.	Verbindungsstutzen Nachverbrennungsrohr	Verbindingsmof leiding post-verb.	1
45	Leva comando farfalla fumi	Smoke butterfly valve control lever	Levier commande papillon des fumées	Palanca de mando de mariposa para humos	Bedienungshebel Rauchdrossel	Bedieningshendel rookklep	1
46	Ruota battuta su by pass	Stop wheel on by-pass	Roue butée sur by-pass	Rueda tope en by pass	Anschlagrad auf Bypass	Wieltje op bypass	1
47	Rubinetto sfiato aria	Well	Puisard	Pozo	Einlaufschacht	Overloop	1
48	Carter contrappeso	Interchangeable counterbalance casing	Carter contrepoids	Cárter contrapeso	Beidseitiges Gegengewicht-Gehäuse	Bekleding contragewicht	1
49	Dado M10	M10 nut	Écrou M10	Tuerca M10	Mutter M10	Moer M10	2
50	Vite T.E. M10 x 40	Screws T.E. M10 x 40	Vis T.E. M10 x 40	Tornillo T.E. M10 x 40	Schraube T.E. M10 x 40	Schroef T.E. M10 x 40	1
51	Vite T.E. M14 x 20	Screws T.E. M14 x 20	Vis T.E. M14 x 20	Tornillo T.E. M14 x 20	Schraube T.E. M14 x 20	Schroef T.E. M14 x 20	1
52	Dado trilobato M6	M6 trilobal nut	Écrou trilobé M6	Tuerca Trilobulada M6	Dreipaß-Mutter M6	Drielobbige moer M6	4
53	Rondella D5	Washer D5	Rondelle D5	Arandela D5	Unterlegscheibe D5	Ring D5	8

	ITALIANO	ENGLISH	FRANÇAIS	ESPAÑOL	DEUTSCH	NEDERLANDS	pz.
54	Vite T.E. C.C. M5x8	ScrewsT.E. C.C. M5x8	VisT.E. C.C. M5x8	TornilloT.E. C.C. M5x8	SchraubeT.E. C.C. M5x8	Schroef T.E. C.C. M5x8	4
55	Vite T.T.bom.es int M8x25	T.T.B internal hexag screw M8x25	Vis tête ronde bombée hexagonale intérieur M8x25	TornilloT.T.B hexag interno M8x25	Schraube mitRundkopf undInnensechskant M8x25	SchroefT.T.B zesk. intern M8x25	2
56	Rondella D8	Washer D8	Rondelle D8	Arandela D8	Unterlegscheibe D8	Ring D8	4
57	Dado basso M8	M8 low nut	Écrou bas M8	Tuerca baja M8	Mutter niedrig M8	Lage moer M8	2
58	Dado trilobato M8	M8 trilobal nut	Écrou trilobé M8	Tuerca Trilobulada M8	Dreipaß-Mutter M8	Drielobbige moer M8	2
59	Vite T.E. M6x16	Screws T.E. M6x16	Vis T.E. M6x16	Tornillo T.E. M6x16	Schraube T.E. M6x16	Schroef T.E. M6x16	4
60	Rondella D10	Washer D10	Rondelle D10	Arandela D10	Unterlegscheibe D10	Ring D10	2
61	Vite TSP cava es M10x30	TSP allen head screw M10x30	Vis TSP tête cylindrique pans M10x30	Tornillo TSP cab hexágono M10x30	Zyl.-Kopf-Inbusschraube TSP M10x30	Schroef TSP cav zeskant M10x30	2
62	Dado basso M10	M10 low nut	Écrou bas M10	Tuerca baja M10	Mutter niedrig M10	Lage moer M10	4
63	Contrappeso	Counterbalance	Contrepoids	Contrapeso	Gegengewicht	Contragewicht	1
64	Eccentrico by pass	By-pass eccentric	Came by-pass	Excéntrico by pass	Exzenter Bypass	Excentrische bypass	1
65	Carter	Casing	Carter	Cárter	Deckung	Bekleding	1
66	Carter frontale	Front casing	Carter frontal	Cárter frontal	Frontabdeckung	Bekleding voorkant	1
67	Fune L.1150mm	Counterbalance rope L.1150mm	Câble contrepoids L.1150mm	Cable contrapeso L.1150mm	Gegengewicht-Seil L.1150mm	Kabel contragewicht L.1150mm	1
68	Copertura entrata aria	Air inlet covering	Revêtement entrée air	Cubierta entrada de aire	Abdeckung Lufteinlass	Afdekplaat luchtinvoer	1
69	Lamiera chiusura piedi	Foot closing plate	Tôle fermeture pieds	Chapa cierre pies	Verschlussblech Füße	Sluitplaat poten	2
70	Lamiera aumento contrappeso	Balance sheet growth	Croissance du bilan	Balance de crecimiento de la hoja	Bilanzentwicklung	Balans groei	5
71	*Valvola scarico sicurezza termica con pozzetto	*Safety thermal relief valve with well	*Soupape décharge sécurité thermique avec logem	*Válvula de descarga de seguridad térmica con pozo	*Überhitzungsschutzventil mit Schacht	*Afvoerklep thermische veiligheid met put	1
72	Piede di riporto	Return foot	Pied de soutien	Pie de recubrimiento	Aufbaufuß	Poot	4
73	Assieme anta saldata	Welded door assembly	Ensemble porte soudée	Grupo puerta soldada	Baugruppe geschweißter Türflügel	Gelaste deur	1
74	Vetro	Glass	Vitre	Vidrio	Scheiibe	Glas	1
75	Chiavistello	Bolt	Verrou	Pestillo	Riegel	Slot	1
77	Comando chiavistello	Bolt control	Commande verrou	Mando pestillo	Riegel Bedienelement	Bediening klik	1
78	Copertura com.do chiavistello	Bolt control cover	Couverture commande verrou	Cubierta mando pestillo	Abdeckung Riegel Bedienelement	Afdekking bediening slot	1
79	Vite T.T.bom.es int M5x5	T.T.B internal hexag screw M5x5	Vis tête ronde bombée hexagonale intérieur M5x5	TornilloT.T.B hexag interno M5x5	Schraube mitRundkopf undInnensechskant M5x5	SchroefT.T.B zesk. intern M5x5	30
80	Vite T.T.bom.es int M5x16	T.T.B internal hexag screw M5x16	Vis tête ronde bombée hexagonale intérieur M5x16	TornilloT.T.B hexag interno M5x16	Schraube mitRundkopf undInnensechskant M5x16	SchroefT.T.B zesk. intern M5x16	7
83	Vite T.T.bom.es int M5x8	T.T.B internal hexag screw M5x8	Vis tête ronde bombée hexagonale intérieur M5x8	TornilloT.T.B hexag interno M5x8	Schraube mitRundkopf undInnensechskant M5x8	SchroefT.T.B zesk. intern M5x8	2
84	Vite T.T.bom.es int M8x25	T.T.B internal hexag screw M8x25	Vis tête ronde bombée hexagonale intérieur M8x25	TornilloT.T.B hexag interno M8x25	Schraube mitRundkopf undInnensechskant M8x25	SchroefT.T.B zesk. intern M8x25	2
87	Assieme cornice rastremata	Tapered frame assembly	Ensemble cadre fuselé	Grupo marco ahusado	Baugruppe verjüngter Rahmen	Gelaste deur	1
88	Kit idraulico supporto	Support hydraulic kit	Kit hydraulique support	Kit hidráulico soporte	Halterung Hydraulik-Kit	Conische steun	1
89	Kit regolazione aria automatica	Automatic air regulation kit	Kit de réglage air automatique	Kit regulación de aire automática	Kit für automatischen Luftregler	Automatische regeling lucht	1
90	Piede rialzo KIT	Kit lifting foot	Pied de réhaussement KIT	Pie elevación KIT	KIT Fußerhöhung	Pootje KIT	1
91	Asta girarrosto (optional)	Spit rod (optional)	Tige broche (optional)	Varilla espetón (opcional)	Bratspieß (optional)	Spitstaaf (optioneel)	1
92	Prolunga asta girarrosto (optional)	Roaster rod extension (optional)	Rallonge tige tournebroche (optional)	Extensión varilla rustidor (opcional)	Bratspießverlängerung (optional)	Verlenging spitstaaf (optioneel)	1
93	Motorino elettrico girarrosto (optional)	Roaster electric motor (optional)	Moteur électrique tournebroche (optional)	Extensión varilla rustidor (opcional)	Elektromotor Bratspieß (optional)	Elektromotortje spit (optioneel)	1
94	Regolatore elettronico (optional)	Electronic regulator (optional)	Régulateur électronique (optional)	Regulador electrónico (opcional)	Elektronischer Regler (optional)	Elektronische regelaar (optioneel)	1
95	Griglia uscita aria controcappa (optional)	Mantel air outlet grille (optional)	Grille sortie air contre-hotte (en option)	Rejilla salida del aire contra campana (opcional)	Luftauslassgitter Rauchfangabdeckung (auf Wunsch)	Rooster rookafvoer beschermlaag (optie)	1
96	Griglia presa aria esterna (optional)	External air inlet grille (optional)	Grille prise d'air externe (optional)	Rejilla toma aire externa (opcional)	Gitter für Außenlufteinlass (optional)	Rooster externe luchtinlaat (optioneel)	1
101	Fermavetro superiore	Holder glass holders	Pare-closes supèrieur	Sujeta vidrios superior	Obere Glashalteleisten	Glashouder onderste	1
102	Fermavetro inferiore	Lower glass holders	Pare-closes infèrieur	Sujeta vidrios inferior	Linke Glashalteleisten	Glashouder bonveste	1
103	Fermaguarnizione iinferiore	Lower gasket stop	Arrêt joint inférieur	Tope empaquetadura inferior	Befestigung für untere Dichtung	Pal pakking onder	1
104	Fermaguarnizione superiore	Lower gasket stop	Arrêt joint inférieur	Tope empaquetadura inferior	Befestigung für untere Dichtung	Pal pakking onder	1
105	Serranda aria	Air damper	Trappe air	Compuerta de aire	Luftklappe	Luchtklep	1
106	Fermaguarnizione laterale	Side gasket stop	Bloc-joint latéral	Protección empaquetadura lateral	Seitliche Dichtungssperrung	Klem pakking zijkant	2
107	Convogliatore aria anta	Door air conveyor	Convoyeur air porte	Transportador aire puerta	Luftableitblech Türflügel	Rookgeleider deur	1
108	Attuatore by pass fumi	Smoke by-pass actuator	Actionneur by-pass fumées	Actuador by pass de humos	Stellantrieb Rauch-Bypass	Actuator bypass rook	1
109	Piastra battuta vetro	Plate glass joke	Blague Verre plat	Placa de vidrio de broma	Flachglas Witz	Spiegelglas grap	2
110	Piastrina dx fermavetro	Right bead plate	Droit plaque de talon	Placa de cordón derecho	Rechts Wulstplatte	Rechts kraal plaat	2
111	Guarnizione	Gasket	Garniture	Junta	Dichtun	Afsluiting	L= 2,1 mt
112	Guarnizione 16x1	Gasket 16 x 1	Joint 16 x 1	Empaquetadura 16 x 1	U-förmige Dichtung 16 x 1	Pakking 16 x 1	L= 1,8 mt
113	Guarnizione 8x1	Gasket 8 x 1	Joint 8 x 1	Empaquetadura 8 x 1	U-förmige Dichtung 8 x 1	Pakking 8 x 1	L= 1,6 mt
-	***solo per versione con serpentina (installazione a Vaso Chiuso)**	*** only for versions with a coil (closed Tank installation)**	***seulement pour version avec serpentin (installation à vase fermé)**	*** solo para versión con serpentín (instalación con vaso cerrado**	*** nur für Ausführung mit Rohrschlange (Installation mit geschlossenem Ausdehnungsgefäß)**	*** Uitsluitend in het geval van de versie met spiraal (installatie met gesloten expansievat)**	-

EDILKAMIN
TECNOLOGIA DEL FUOCO